HIWIN CONFIDENTIAL
機密文件未經許可，嚴禁複製

TM-2-75-PB0 Torque Motor

Electrical specifications

Winding code : PB0	Symbol	Unit	Water cooling
Continuous torque	T_c	Nm	284
Continuous current	I_c	A_{rms}	20.5
Stall torque	T_s	Nm	233
Stall current	I_s	A_{rms}	16.4
Peak torque(for 1sec.)	T_p	Nm	570
Peak current(for 1sec.)	I_p	A_{rms}	56
Torque constant	K_t	Nm/Arms	14.9
Electrical time constant	T_e	ms	7
Resistance (line to line at 25℃)	R_{25}	Ω	2.5
Inductance (line to line)	L	mH	17.4
Number of poles	2p		44
Back emf constant (line to line)	K_v	Vrms/rad/s	8.6
Motor constant (at 25℃)	K_m	Nm/√W	7.63
Thermal resistance	R_{th}	K/W	0.067
Thermal sensor			PTC SNM100+SNM130+Pt1000
Max. DC BUS		V_{DC}	750
Inertia of rotor	J	kgm^2	0.041
Thermal time constant	T_{th}	s	160
Max. continuous power dissipation	P_c	W	2225
Max. peak power dissipation	P_p	W	16605
Rated speed(at 600VDC)		rpm	307

Mechanical specifications

	Symbol	Unit	Water cooling
Mass of rotor	M_r	kg	3.6
Mass of stator	M_S	kg	17.9
Height of stator	H_S	mm	100
Height of rotor	H_R	mm	51
Length of rotor centring fit	H	mm	15
Water temperture difference for Pc	△θ	K	5
Minimum water flow	q	l/min	6.4
Max. pressure drop	△p	bar	1

T-N curve

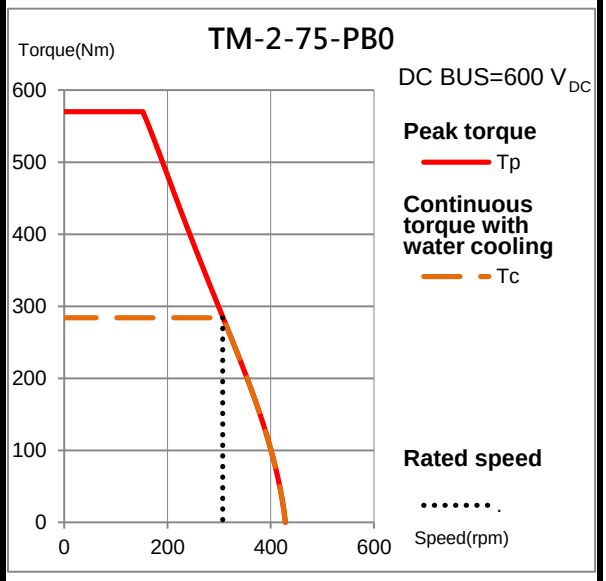

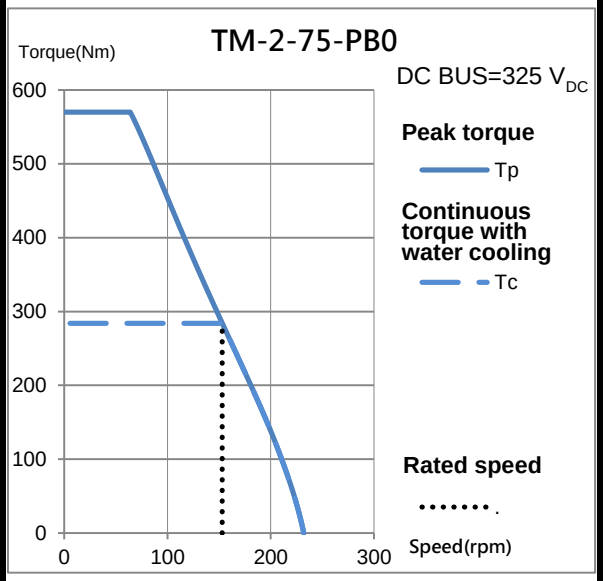

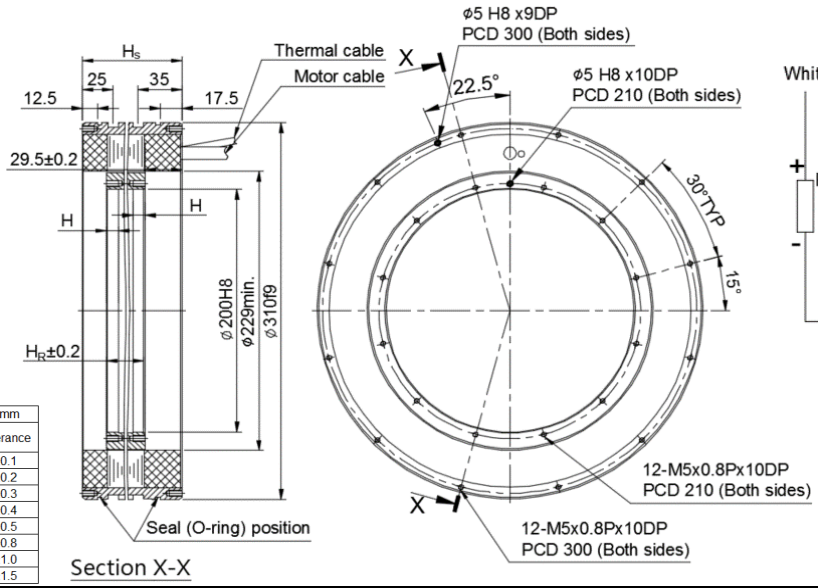

General tolerance mm	
Nominal dimension	Tolerance
~ 6	±0.1
> 6 ~ 30	±0.2
> 30 ~ 120	±0.3
> 120 ~ 300	±0.4
> 300 ~ 600	±0.5
> 600 ~ 1200	±0.8
> 1200 ~ 2400	±1.0
> 2400	±1.5

Thermal sensor

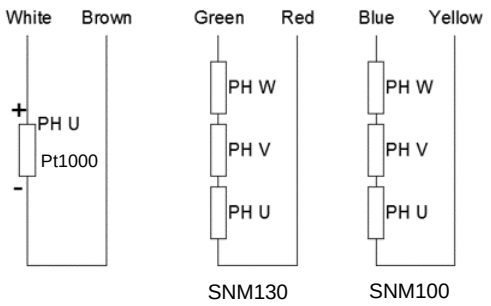

Motor wire table	
Color or wire no.	Signal
U/L1	PH U
V/L2	PH V
W/L3	PH W
Green/Yellow	GND

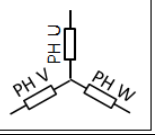

Except dimensions, all the specifications in the table are in ±10% of tolerance

Version: 2.00

This drawing is only for reference, detail dimensions please refer to approval drawing.

Date: 2020/10/23

大銀微系統股份有限公司 HIWIN MIKROSYSTEM CORP.