HIWIN® MIKROSYSTEM

Incremental Position Measurement System

User Manual

www.hiwinmikro.tw

ME07UE01-2307_V1.0

Related Documents

Through related documents, users can quickly understand the positioning of this manual and the correlation between manuals and products. Go to HIWIN MIKROSYSTEM's official website → Download → Manual Overview for details (https://www.hiwinmikro.tw/Downloads/ManualOverview_EN.htm).

Approvals

Approvals			
Integration Standards		EU Directives	
		Emissions	EN-61000-6-4:2007/A1:2011
		Immunity	EN 6100-6-2:2005
Incremental Position Measurement System Model		EU Directives	
		CE	RoHS Directive
PM-A Series	PM-A-□□-□D-V-□□	✓	✓
PM-B / PM-C Series	PM-□-□□-□□-T-□□	✓	✓
	PM-□-□□-□□-G-□□-□□	✓	✓
	PM-□-□□-□□-C-10	✓	✓
Counter Series	UPLD-A-□□-□-□□	✓	✓
	PMLD-A-□□-□-□□	✓	✓
	PMED-H□-1-□□-□	✓	✓
	PMED-S3-□-1-□	✓	✓
	PMED-S4-□-1-□	✓	✓

Note:

1. PM-□ is for PM-B and PM-C series.
2. EN: Europischen Normen = European standard

Table of Contents

1. General information 1-1
   1.1 Revision history 1-2
   1.2 About this manual 1-3
   1.3 General precautions 1-4
   1.4 Safety instruction 1-5
   1.5 Copyright 1-7
   1.6 Manufacturer information 1-7
   1.7 Product monitoring 1-7

2. Basic safety information 2-1
   2.1 Overview 2-2
   2.2 Basic safety notices 2-2
   2.3 Reasonably foreseeable misuse 2-3
      2.3.1 Environment factors 2-3
      2.3.2 Personal factors 2-3
   2.4 Conversions and modifications 2-3
   2.5 Residual risks 2-4
   2.6 Personnel requirements 2-4
   2.7 Protective equipment 2-5
      2.7.1 Personal protective equipment 2-5
   2.8 Labels on incremental position measurement system 2-5

3. Product description 3-1
   3.1 Incremental position measurement system description 3-2
   3.2 Main components of incremental position measurement system 3-5
      3.2.1 Technical specifications of incremental position scale 3-5
         3.2.1.1 PS-A series 3-5
         3.2.1.2 PS-B / PB-C series 3-6
      3.2.2 Technical specifications of incremental position measurement 3-7
         3.2.2.1 PM-A series 3-7
         3.2.2.2 PM-B series 3-8
         3.2.2.3 PM-C series 3-11
      3.2.3 Technical specifications of counter 3-14
      3.2.4 Specifications of signal 3-19
   3.3 Order code 3-20
      3.3.1 PM-A series 3-20
      3.3.2 PM-B / PM-C series 3-21

3.3.3 Counter series 3-22

4. Transport and setup 4-1
4.1 Delivery 4-2
4.2 Transport to the installation site 4-2
4.3 Requirements at the installation site 4-3
4.3.1 Recommended accuracy for installation surface 4-3
4.3.2 Dimensions of incremental position measurement system 4-4
4.3.2.1 PM-A series 4-4
4.3.2.2 PM-B / PM-C series 4-4
4.3.2.3 Counter series 4-7
4.4 Storage 4-10
4.5 Unpacking and setup 4-12

5. Assembly and connection 5-1
5.1 Mechanical installation 5-2
5.1.1 Incremental position scale installation 5-3
5.1.2 Incremental position measurement installation 5-5
5.1.3 Counter installation 5-6
5.2 Electrical installation 5-7
5.2.1 Port types of incremental position measurement 5-8
5.2.2 Pin assignment of signals for counter 5-13
5.2.3 Configuration of signal receiver 5-15

6. Commissioning 6-1
6.1 Commissioning 6-2
6.1.1 Counter UPLD and PMLD 6-2

7. Maintenance and cleaning 7-1
7.1 Maintenance 7-2
7.1.1 Counter 7-2
7.2 Cleaning 7-3

8. Disposal 8-1
8.1 Waste disposal 8-2
8.1.1 Incremental position measurement 8-2
8.1.2 Counter 8-2

9. Troubleshooting 9-1
9.1 Troubleshooting 9-2
9.1.1 Incremental position measurement 9-2

9.1.2 Counter 9-2

10. Declaration of incorporation 10-1
10.1 Declaration of incorporation 10-2

11. Appendix 11-1
11.1 Glossary 11-2
11.2 Unit conversion 11-3
11.3 Tolerances and hypotheses 11-5
11.3.1 Dimensional tolerances 11-5
11.3.2 Geometric tolerances 11-5
11.4 Optional accessories 11-6

1. General information

1. General information 1-1
1.1 Revision history 1-2
1.2 About this manual 1-3
1.3 General precautions 1-4
1.4 Safety instruction 1-5
1.5 Copyright 1-7
1.6 Manufacturer information 1-7
1.7 Product monitoring 1-7

1.1 Revision history

The version of the manual is also indicated on the bottom of the front cover.

ME07UE01-2307_V1.0

Version

Release Date

Release Date	Version	Applicable Product	Revision Contents
Jul. 20th, 2023	1.0	Incremental position measurement system	First edition.

1.2 About this manual

This manual aims to assist users to operate incremental position measurement system. The content of this manual contains introduction, sizing, installation, troubleshooting, maintenance, waste disposal and appendix. Before using the product, please carefully read through this manual, and follow the general precautions and safety instruction to ensure normal operation of the product.

1.3 General precautions

Before using the product, please carefully read through this manual. HIWIN MIKROSYSTEM is not responsible for any damage, accident or injury caused by failure in following the installation instructions and operating instructions stated in this manual.

- Before installing or using the product, ensure there is no damage on its appearance. If any damage is found after inspection, please contact HIWIN MIKROSYSTEM or local dealers.
- Carefully read through the specification noted on the product label or technical document, and check if the product is used with the power supply specified in the product requirement. Install the product in accordance with the specification and instructions stated in this manual. HIWIN MIKROSYSTEM is not responsible for any damage, accident or injury caused by the usage of incorrect power supply.
- Do not subject the product to shock or place it in risky locations. HIWIN MIKROSYSTEM is not responsible for any damage, accident or injury caused by improper usage.
- Do not disassemble or modify the product on your own. The design of the product has been verified by structural calculation, simulation analysis and actual testing. HIWIN MIKROSYSTEM is not responsible for any damage, accident or injury caused by disassembly or modification done by users without authorization.
- Avoid using magnetic tools, screws, magnetic storage devices, or precision instruments to contact the position scale. HIWIN MIKROSYSTEM is not responsible for any damage, accident or injury caused by this.
- If an error or any abnormal conditions occur in the product, please refer to chapter 9 and follow the instructions for troubleshooting. The product can only be repaired by qualified technician from HIWIN MIKROSYSTEM. HIWIN MIKROSYSTEM is not responsible for any damage, accident or injury caused by human factors.
- If the information of registration does not match with your purchasing or if there are any questions related to the product, please contact the sales representatives of HIWIN MIKROSYSTEM or agents or dealers.

HIWIN MIKROSYSTEM offers 1-year warranty for the product. The warranty does not cover damage caused by improper usage (refer to the precautions and instructions stated in this manual) or natural disaster.

1.4 Safety instruction

- Carefully read through this manual before installation, transportation, maintenance, and examination. Ensure the product is correctly used.
- Carefully read through electromagnetic (EM) information, safety information, and related precautions.
- Safety precautions in this manual are classified into “DANGER,” “WARNING,” and “CAUTION.”

⚠DANGER
Imminent danger! Indicates that death or severe personal injury will result if proper precautions are not taken.

⚠WARNING
Potentially dangerous situation! Indicates that death or severe personal injury may result if proper precautions are not taken.

⚠CAUTION
Potentially dangerous situation! Indicates that property damage or environmental pollution can result if proper precautions are not taken.

Warning Signs			
	Warning!		Electrostatic-sensitive device.
	Do not scratch the position scale with sharp objects.		Keep magnetic objects away from the position scale.
	Do not band the position scale.		When storing the position scale, the radius should not be smaller than 50 mm.

Mandatory Signs			
	Refer to user manual!		Disconnect before carrying out maintenance or repair.
	Wear protective gloves!		Wear safety footwear!

⚠DANGER

- Do not use the product in explosive zones.

⚠WARNING

- During operation, do not touch any movable parts (e.g., position measurement) to avoid bruising, rubbing, abrasing, and seizing of limbs or clothes.
- Since the position measurement is sensitive to static electricity, please be careful. Without proper ESD protection, do not touch the cables or the pins of connectors.
- Do not perform wiring work or disconnect electrical connections when power on.
- Perform wiring work in power off state only.
- Check all the cables and plug connections before switching on the device.

⚠CAUTION

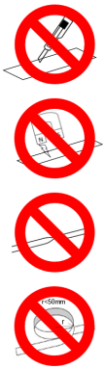

- Do not scratch the position scale with sharp objects.
- Keep magnetic objects away from the position scale.
- Do not band the position scale.
- When storing the position scale, the radius should not be smaller than 50 mm.
- Before installation, check if the position measurement has transport damages. Do not install damaged position measurement.
- Do not apply excessive force to the product.
- Do not drop the product.
- Magnetic objects (e.g., screwdriver) cannot be in contact with the scale.
- Since the position scale consists of magnetic substance, keep it away from strong magnetic materials and strong magnetic fields during usage and installation to prevent malfunction.
- Stay at least 5 cm away from the magnetic field strength of 5000 gauss to prevent the position measurement system from disruption.

1.5 Copyright

This user manual is protected by copyright. Any reproduction, publication in whole or in part, modification or abridgement requires the written approval of HIWIN MIKROSYSTEM.

Note:
HIWIN MIKROSYSTEM reserves the right to change the contents of this manual or product specifications without prior notice.

1.6 Manufacturer information

Table 1.6.1 Manufacturer's details

Corp.	HIWIN MIKROSYSTEM CORP.
Address	No.6, Jingke Central Rd., Taichung Precision Machinery Park, Taichung 40852, Taiwan
Tel.	+886-4-23550110
Fax	+886-4-23550123
Sales E-mail	business@hiwinmikro.tw
Customer Service E-mail	service@hiwinmikro.tw
Website	http://www.hiwinmikro.tw

1.7 Product monitoring

Please inform HIWIN MIKROSYSTEM about the following contents:

- Accidental risk assessment.
- Potential source of danger involving person and property.
- Anything in this user manual which is difficult to understand.

(This page is intentionally left blank.)

2. Basic safety information

2. Basic safety information 2-1
2.1 Overview 2-2
2.2 Basic safety notices 2-2
2.3 Reasonably foreseeable misuse 2-3
2.3.1 Environment factors 2-3
2.3.2 Personal factors 2-3
2.4 Conversions and modifications 2-3
2.5 Residual risks 2-4
2.6 Personnel requirements 2-4
2.7 Protective equipment 2-5
2.7.1 Personal protective equipment 2-5
2.8 Labels on incremental position measurement system 2-5

2.1 Overview

This chapter is for the safety of everyone who works with, assembles, installs, operates, maintains or disassembles position measurement system. Failure to comply with the following information could be dangerous!

Position measurement system is a magnetic distance measuring system for positioning tasks with linear movement within an automated system. It is mainly used in linear motors. Position measurement system may only be used as described for the intended purpose, and it must not be used outdoors or in hazardous areas where there is a risk of explosions.

⚠WARNING
Danger due to strong magnetic fields!

2.2 Basic safety notices

- Stay vigilant for safety when using the product. Immediately report if there is an emergency.
- Users need to maintain a good mental state. Do not use the product without clear consciousness.
- Do not run or play in the workspace.
- It is necessary to understand chemical related to the product such as alcohol and lubricants. Mark them on the bottles to prevent accidental ingestion.
- Be sure to configure fire extinguishers and install automatic sprinklers in the operating environment to avoid fire that causes casualties and property loss.
- It is strictly forbidden to store flammable substances in the working area, smoking is prohibited in the place.

2.3 Reasonably foreseeable misuse

2.3.1 Environment factors

- The product is in contact with magnetic objects.

⚠WARNING

Danger of serious or fatal injuries!

- Before and during all assembly, disassembly or repair work, the position measurement system or the higher-level system must be de-energized and it must be ensured that the mains connection cannot be re-established by other persons!
- Position measurement system must not be used in potentially explosive atmospheres.
- Position measurement system may only be used and operated indoors.

2.3.2 Personal factors

- Operation performed by untrained or unauthorized personnel.
- Persons who have not fully read and understood this user manual.
- Not follow the instructions in this user manual intentionally or carelessly while using the product.
- Operate the product without clear consciousness or under the influence of drugs or alcohol.

2.4 Conversions and modifications

- Do not disassemble the product on your own without authorization. If there are any special requests, please contact HIWIN MIKROSYSTEM.
- Do not tear the product label.

2.5 Residual risks

If users operate the product with instructions in the user manual, risks can be effectively controlled and reduced. Please refer to the relevant chapters for risks and warnings of the management and operation.

If users still have doubts about the product after reading the manual, please contact the sales representatives of HIWIN MIKROSYSTEM, there will be professionals to assist you.

2.6 Personnel requirements

Users must read the product manual carefully, be authorized or have knowledge of the product, and must be familiar with safety equipment and regulations.
Untrained personnel can cause personal injury, serious damage to the machine or to the product.

- Configuration, adjustment, installation, and maintenance can only be performed by trained staff.
- These professionals must be able to identify the hazards that may be caused by mechanical, electrical, or electronic equipment.

Professionals are those who are familiar with the safety guidelines of electrical and automation technology when carrying out configuration tasks, who are able to adjust, ground, and label circuits and equipment/systems according to safety standards.

2.7 Protective equipment

2.7.1 Personal protective equipment

Table 2.7.1.1

Operation Phase	Personal Protective Equipment	Description
Transport, maintenance and cleaning		Wear safety shoes to prevent the risk of the injury caused by the falling product.
		Wear latex gloves when wiping the product with alcohol.

2.8 Labels on incremental position measurement system

The label affixed on the product and package provides detailed information on product specification.

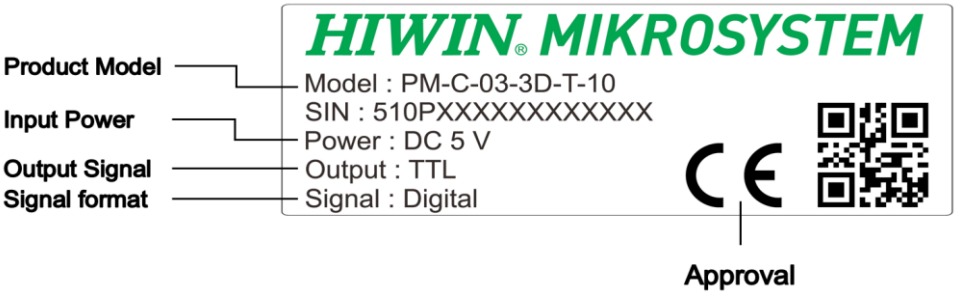

Figure 2.8.1 Shipping label of incremental position measurement (PM-A / PM-B / PM-C series)

Figure 2.8.2 Shipping label of counter

Figure 2.8.3 Shipping label of incremental position scale

Note:

1. Before using the product, check if the label matches the specification.
2. The contents on the shipping label will vary according to the selected specification.
3. The shipping label of incremental position scale will be directly printed on the scale.

3. Product description

3. Product description 3-1
3.1 Incremental position measurement system description 3-2
3.2 Main components of incremental position measurement system 3-5
3.2.1 Technical specifications of incremental position scale 3-5
3.2.1.1 PS-A series 3-5
3.2.1.2 PS-B / PB-C series 3-6
3.2.2 Technical specifications of incremental position measurement 3-7
3.2.2.1 PM-A series 3-7
3.2.2.2 PM-B series 3-8
3.2.2.3 PM-C series 3-11
3.2.3 Technical specifications of counter 3-14
3.2.4 Specifications of signal 3-19
3.3 Order code 3-20
3.3.1 PM-A series 3-20
3.3.2 PM-B / PM-C series 3-21
3.3.3 Counter series 3-22

3.1 Incremental position measurement system description

Incremental position measurements (PM) are divided into PM-A, PM-B and PM-C series, and the corresponding incremental position scales (PS) are PS-A, PS-B and PS-C series. PM-A series is used with V type position measurement, while PM-B and PM-C series are used with T, PG and C type position measurement. Counter series includes micro LCD counter system (UPLD), LCD counter system (PMLD), high performance single-axis counter (PMED-H□), high performance multi-axis counter (PMED-S3) and multi-function and multi-axis counter for machine tools (PMED-S4).

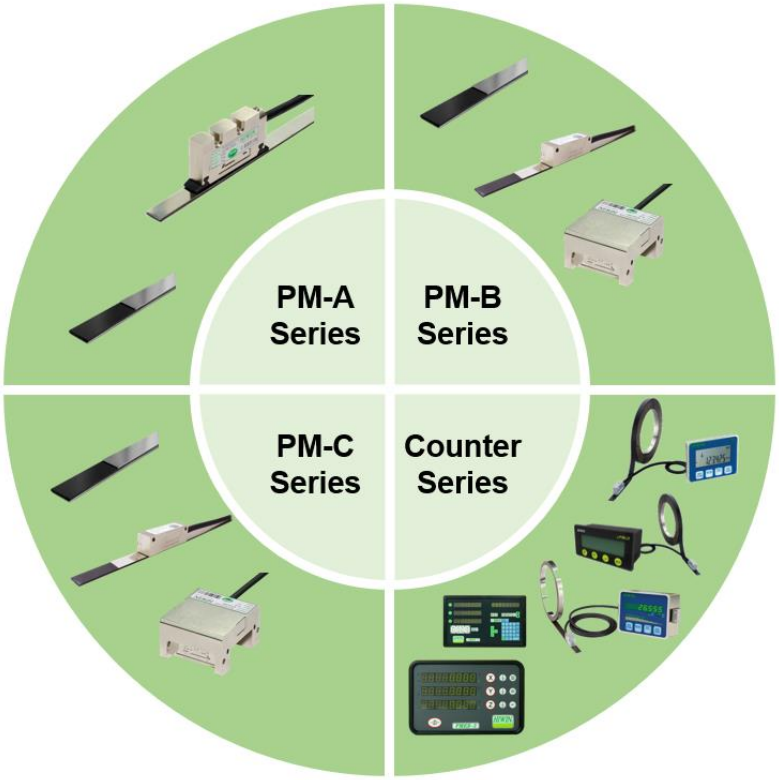

Figure 3.1.1

Table 3.1.1

Product		Diagram
PM-A series	V type position measurement	

Product		Diagram
PM-B / PM-C series	T type position measurement	
	PG type position measurement	
	C type position measurement	
Counter series	Micro LCD counter system	
	LCD counter system	
	High performance single-axis counter	
	High performance multi-axis counter	

Product		Diagram
	Multi-function and multi-axis counter for machine tools	

3.2 Main components of incremental position measurement system

This product consists of incremental position scale, incremental position measurement and counter. The information of technical specifications is as follows.

Figure 3.2.1

3.2.1 Technical specifications of incremental position scale

3.2.1.1 PS-A series

■ **System specification**

Table 3.2.1.1.1

Feature	Technical Data	Additional Information
Pole pitch	5 mm	-
Accuracy	±(80+15xL) μm/m L: position scale length (Unit: m)	20°C
Maximum length of scale	30 m	-

■ **Mechanical specification**

Table 3.2.1.1.2

Feature	Technical Data	Additional Information
Position scale width	$10^{+0.2}_{0}$ mm	-
Position scale thickness	1.83±0.1 mm	with cover strip
Mass	64±1 g/m	-

■ **Environmental specification**

Table 3.2.1.1.3

Feature	Technical Data	Additional Information
Operating temperature	0°C~50°C	-
Storage temperature	-5°C~70°C	-
Relative humidity	0~100%	condensation allowed
Expansion coefficient	$(11\pm1)\times10^{-6}$/K	-
International protection marking	IP67	

3.2.1.2 PS-B / PB-C series

■ **System specification**

Table 3.2.1.2.1

Feature	Technical Data	Additional Information
Pole pitch	1 mm / 2 mm	PS-B series: 1 mm PS-C series: 2 mm
Accuracy	±20 μm/m	20°C
Maximum length of scale	30 m	-

■ **Mechanical specification**

Table 3.2.1.2.2

Feature	Technical Data	Additional Information
Position scale width	$10^{+0.2}_{0}$ mm	-
Position scale thickness	1.83±0.1 mm	with cover strip
Mass	60 g/m	-

■ **Environmental specification**

Table 3.2.1.2.3

Feature	Technical Data	Additional Information
Operating temperature	0°C~50°C	-
Storage temperature	-5°C~70°C	-
Relative humidity	0~100%	condensation allowed
Expansion coefficient	$(11\pm1)\times10^{-6}$/K	-
International protection marking	IP67	

3.2.2 Technical specifications of incremental position measurement

3.2.2.1 PM-A series

■ **V type position measurement**

Table 3.2.2.1.1

Feature	Technical Data		Additional Information
Resolution	5 μm		-
Repeatability	±10 μm		unidirectional
Reference point signal	1 pulse/pole pitch		-
Maximum velocity (speed)	5 m/s	8 m/s	-
Installation gap	0.5±0.3 mm		-
Power supply	5 V DC±5%	24 V DC±10%	-
Current consumption	50 mA		-
Signal format	Digital		-
Output signal	5 V TTL/RS422	24 V/PP	-
RoHS directive	Qualified		-
Operating temperature	0°C~50°C		-
Storage temperature	-5°C~70°C		-
Relative humidity	0~100%		condensation allowed
International protection marking	IP67		IEC60529
Vibration resistance	145 m/s^2 (50 Hz~2000 Hz)		IEC60068-2-6
Shock resistance	1000 m/s^2 (6 ms)		IEC60068-2-27
Maximum external magnetic field	±5 mT		-
ECM protection	EN61000-6-2		-
	EN61000-6-4		-
Size	50×27×10 mm		-
Mass	28 g		-

3.2.2.2 PM-B series

■ **T type position measurement**

Table 3.2.2.2.1

Feature	Technical Data		Additional Information
Resolution	1 mm	1 μm	-
Repeatability	±3 μm	±2 μm	unidirectional
Reference point signal	1 pulse/pole pitch or independent reference point		-
Maximum velocity (speed)	10 m/s	5 m/s	-
Installation gap	0.2±0.1 mm		-
Power supply	5 V DC±5%		-
Current consumption	50 mA		-
Signal format	Analog	Digital	-
Output signal	SIN/COS 1 Vp-p	5 V TTL/RS422	-
RoHS directive	Qualified		-
Operating temperature	0°C~50°C		-
Storage temperature	-5°C~70°C		-
Relative humidity	0~100%		condensation allowed
International protection marking	IP67		IEC60529
Vibration resistance	145 m/s^2 (50 Hz~2000 Hz)		IEC60068-2-6
Shock resistance	1000 m/s^2 (6 ms)		IEC60068-2-27
Maximum external magnetic field	±5 mT		-
ECM protection	EN61000-6-2		-
	EN61000-6-4		-
Size	45×12×14 mm		-
Mass	32 g		-

■ PG type position measurement

Table 3.2.2.2.2

Feature	Technical Data		Additional Information
Resolution	1 mm	1 μm	-
Repeatability	±3 μm	±2 μm	unidirectional
Reference point signal	1 pulse/pole pitch or independent reference point		-
Maximum velocity (speed)	10 m/s	5 m/s	-
Installation gap	0.2±0.1 mm		-
Power supply	5 V DC±5%		-
Current consumption	50 mA		-
Signal format	Analog	Digital	-
Output signal	SIN/COS 1 Vp-p	5 V TTL/RS422	-
RoHS directive	Qualified		-
Operating temperature	0°C~50°C		-
Storage temperature	-5°C~70°C		-
Relative humidity	0~100%		condensation allowed
International protection marking	IP67		IEC60529
Vibration resistance	145 m/s^2 (50 Hz~2000 Hz)		IEC60068-2-6
Shock resistance	1000 m/s^2 (6 ms)		IEC60068-2-27
Maximum external magnetic field	±5 mT		-
ECM protection	EN61000-6-2		-
	EN61000-6-4		-
Size	H20: 43×39×24.4 mm H25: 46.4×39×29.5 mm		-
Mass	115 g		-

■ C type position measurement

Table 3.2.2.2.3

Feature	Technical Data		Additional Information
Resolution	1 mm	1 μm	-
Repeatability	±3 μm	±2 μm	unidirectional
Reference point signal	1 pulse/pole pitch or independent reference point		-
Maximum velocity (speed)	10 m/s	5 m/s	-
Installation gap	0.2±0.1 mm		-
Power supply	5 V DC±5%		-
Current consumption	50 mA		-
Signal format	Analog	Digital	-
Output signal	SIN/COS 1 Vp-p	5 V TTL/RS422	-
RoHS directive	Qualified		-
Operating temperature	0°C~50°C		-
Storage temperature	-5°C~70°C		-
Relative humidity	0~100%		condensation allowed
International protection marking	IP67		IEC60529
Vibration resistance	145 m/s^2 (50 Hz~2000 Hz)		IEC60068-2-6
Shock resistance	1000 m/s^2 (6 ms)		IEC60068-2-27
Maximum external magnetic field	±5 mT		-
ECM protection	EN61000-6-2		-
	EN61000-6-4		-
Size	38×22×8.1 mm		-
Mass	30 g		-

3.2.2.3 PM-C series

■ **T type position measurement**

Table 3.2.2.3.1

Feature	Technical Data	Additional Information
Resolution	1 μm	-
Repeatability	±1 μm	unidirectional
Reference point signal	1 pulse/pole pitch or independent reference point	-
Maximum velocity (speed)	7 m/s	-
Installation gap	0.5±0.3 mm	-
Power supply	5 V DC±5%	-
Current consumption	35 mA	-
Signal format	Digital	-
Output signal	5 V TTL/RS422	-
RoHS directive	Qualified	-
Operating temperature	0°C~50°C	-
Storage temperature	-5°C~70°C	-
Relative humidity	0~100%	condensation allowed
International protection marking	IP67	IEC60529
Vibration resistance	145 m/s^2 (50 Hz~2000 Hz)	IEC60068-2-6
Shock resistance	1000 m/s^2 (6 ms)	IEC60068-2-27
Maximum external magnetic field	±5 mT	-
ECM protection	EN61000-6-2	-
	EN61000-6-4	-
Size	45×12×14 mm	-
Mass	32 g	-

■ PG type position measurement

Table 3.2.2.3.2

Feature	Technical Data	Additional Information
Resolution	1 μm	-
Repeatability	±1 μm	unidirectional
Reference point signal	1 pulse/pole pitch or independent reference point	-
Maximum velocity (speed)	7 m/s	-
Installation gap	0.5±0.3 mm	-
Power supply	5 V DC±5%	-
Current consumption	35 mA	-
Signal format	Digital	-
Output signal	5 V TTL/RS422	-
RoHS directive	Qualified	-
Operating temperature	0°C~50°C	-
Storage temperature	-5°C~70°C	-
Relative humidity	0~100%	condensation allowed
International protection marking	IP67	IEC60529
Vibration resistance	145 m/s^2 (50 Hz~2000 Hz)	IEC60068-2-6
Shock resistance	1000 m/s^2 (6 ms)	IEC60068-2-27
Maximum external magnetic field	±5 mT	-
ECM protection	EN61000-6-2	-
	EN61000-6-4	-
Size	H20: 43×39×24.4 mm H25: 46.4×39×29.5 mm	-
Mass	115 g	-

■ C type position measurement

Table 3.2.2.3.3

Feature	Technical Data	Additional Information
Resolution	1 μm	-
Repeatability	±1 μm	unidirectional
Reference point signal	1 pulse/pole pitch or independent reference point	-
Maximum velocity (speed)	7 m/s	-
Installation gap	0.5±0.3 mm	-
Power supply	5 V DC±5%	-
Current consumption	35 mA	-
Signal format	Digital	-
Output signal	5 V TTL/RS422	-
RoHS directive	Qualified	-
Operating temperature	0°C~50°C	-
Storage temperature	-5°C~70°C	-
Relative humidity	0~100%	condensation allowed
International protection marking	IP67	IEC60529
Vibration resistance	145 m/s^2 (50 Hz~2000 Hz)	IEC60068-2-6
Shock resistance	1000 m/s^2 (6 ms)	IEC60068-2-27
Maximum external magnetic field	±5 mT	-
ECM protection	EN61000-6-2	-
	EN61000-6-4	-
Size	38×22×8.1 mm	-
Mass	30 g	-

3.2.3 Technical specifications of counter

■ Micro LCD counter system

Table 3.2.3.1

Feature		Technical Data	Additional Information
Display method		LCD 8-digit counter	-
Accuracy		±(80+15xL) μm L: Position scale length (Unit: m)	20°C
Resolution		5 μm	-
Repeatability		±10 μm	-
Operating velocity (speed)		3 m/s (2G acceleration)	-
Power supply		AA battery x2	-
Battery life		1 year (moving velocity is set as 1.5 m/s)	-
Operating temperature		0°C~50°C	-
Storage temperature		-5°C~55°C	-
International protection marking		Position scale / Read head: IP67 Counter: IP43	-
Functions	General	Read head direction setting	-
		Unit conversion (mm / inch / °)	-
		Absolute / Relative position (ABS / INC) switching	-
		Display resolution setting	-
		Reference point setting	-
		5 sets of maximum moving velocity settings (Default: 1.5 m/s)	-
	Programmable	Programmable radius setting (minimum radius: 50 mm)	-
		5 sets of programmable reference point compensation settings	-
		Programmable coefficient ratio setting	-
	Display	Interval adjustment display	-
		Power display and monitoring	-
	Other	Keyboard lock	-
		Parameters saving function	-
		5 sets of independent increment counters (For relative measurement)	-

Note:

1. The data of repeatability is the value measured as the installation gap is 1 mm.
2. When the ambient temperature is 20±5°C, the test result of battery capacity is 2200 mAh (the capacity varies according to the operating ambient temperature).

■ LCD counter system

Table 3.2.3.2

Feature		Technical Data	Additional Information
Display method		LCD 8-digit counter	-
Accuracy		±(80+15xL) μm L: Position scale length (Unit: m)	20°C
Resolution		5 μm	-
Repeatability		±10 μm	-
Operating velocity (speed)		3 m/s (2G acceleration)	-
Power supply		AA battery x2	-
Battery life		1 year (moving velocity is set as 1.5 m/s)	-
Operating temperature		0°C~50°C	-
Storage temperature		-5°C~70°C	-
International protection marking		Position scale / Read head: IP67 Counter: IP43	-
Functions	General	Read head direction setting	-
		Unit conversion (mm / inch / °)	-
		Absolute / Relative position (ABS / INC) switching	-
		Display resolution setting	-
		Reference point setting	-
		5 sets of maximum moving velocity settings (Default: 1.5 m/s)	-
	Programmable	Programmable radius setting (minimum radius: 50 mm)	-
		5 sets of programmable reference point compensation settings	-
		Programmable coefficient ratio setting	-
	Display	Interval adjustment display	-
		Power display and monitoring	-
	Other	Keyboard lock	-
		Parameters saving function	-
		5 sets of independent increment counters (For relative measurement)	-

Note:

1. The data of repeatability is the value measured as the installation gap is 1 mm.
2. When the ambient temperature is 20±5°C, the test result of battery capacity is 2200 mAh (the capacity varies according to the operating ambient temperature).

■ High performance single-axis counter

Table 3.2.3.3

Feature	Technical Data	Additional Information
Display method	LED 8-digit counter	-
Resolution option	1 μm, 2 μm, 5 μm, 10 μm	-
Input signal	Analog: SIN/COS 1 Vp-p	Velocity: 2 m/s, 2 kHz
	Digital: 5 V TTL/RS422	Velocity: 2 m/s, 0.5 MHz
Power supply	5 V DC±5% (AC 100~240 V/5 V DC)	-
Power consumption	1 A	-
Relay contact rating	24 V DC/2 A	-
Operating temperature	0°C~50°C	-
Storage temperature	-5°C~70°C	-
International protection marking	Counter: IP43	-
Functions	Counting direction setting	-
	Metric / Imperial (mm / inch) unit conversion	-
	Absolute / Relative position (ABS / INC) switching	-
	Display resolution setting mm: 0.001, 0.01, 0.1 inch: 0.000001, 0.00001, 0.0001, 0.001	-
	Analog / Digital signal (Analog / Digital) selection	-
	5 sets of maximum moving velocity settings (Default: 1.5 m/s)	-
	Midpoint finding (1/2) function	
	8 sets of default values (Preset)	-
	4 sets of Relay normal open contact (N.O.) outputs (Optional)	-
	Instant power failure memory	-
	RS232 output (Optional)	-

■ High performance multi-axis counter

Table 3.2.3.4

Feature	Technical Data	Additional Information
Display method	LED 8-digit counter	-
Resolution option	0.1 μm, 0.2 μm, 0.5 μm, 1 μm, 2 μm, 5 μm, 10 μm, 20 μm, 50 μm	-
Input signal	Digital: 5 V TTL/RS422	-
Power supply	8~30 V DC±5%	-
Power consumption	80 mA	-
Operating frequency	<1.5 MHz	-
Operating temperature	0°C~50°C	-
Storage temperature	-5°C~70°C	-
International protection marking	Counter: IP43	-
Functions	ON / OFF function	-
	Coordinate zero setting	
	Metric / Imperial (mm / inch) unit conversion	-
	Absolute / Relative position (ABS / INC) switching	-
	Display resolution setting 0.0001, 0.0002, 0.0005, 0.001, 0.002, 0.005, 0.01, 0.02, 0.05, 0.1, 0.2, 0.5, 1, 5, 10	-
	Diameter / Radius (DIA / RAD) switching	-
	Midpoint finding (1/2) function	
	Linear error compensation	-
	Instant power failure memory	-
	RS232 output (Optional)	-

■ Multi-function and multi-axis counter for machine tools

Table 3.2.3.5

Feature	Technical Data	Additional Information
Display method	LED 8-digit counter	-
Resolution option	0.1 μm, 0.2 μm, 0.5 μm, 1 μm, 2 μm, 5 μm, 10 μm, 20 μm, 50 μm	-
Input signal	Digital: 5 V TTL/RS422	-
Power supply	9~240 V AC	-
Operating frequency	<2 MHz	-
Operating temperature	0°C~50°C	-
Storage temperature	-5°C~70°C	-
International protection marking	Counter: IP43	-
Functions	Coordinate zero setting	
	Metric / Imperial (mm / inch) unit conversion	-
	Absolute / Relative position (ABS / INC) switching	-
	Display resolution setting 0.0001, 0.0002, 0.0005, 0.001, 0.002, 0.005, 0.01, 0.02, 0.05, 0.1, 0.2, 0.5, 1, 5, 10	-
	Diameter / Radius (DIA / RAD) switching	-
	Midpoint finding (1/2) function	
	Linear error compensation	-
	Instant power failure memory	-
	Shrinkage, calculator, mechanical origin searching (RI), divide holes on a circumference, divide holes on an oblique line	-
	Arc surface machining, inclined plane machining	-

3.2.4 Specifications of signal

For incremental position measurement system, there are two kinds of signal formats, analog signal and digital signal.

■ **Analog signal**

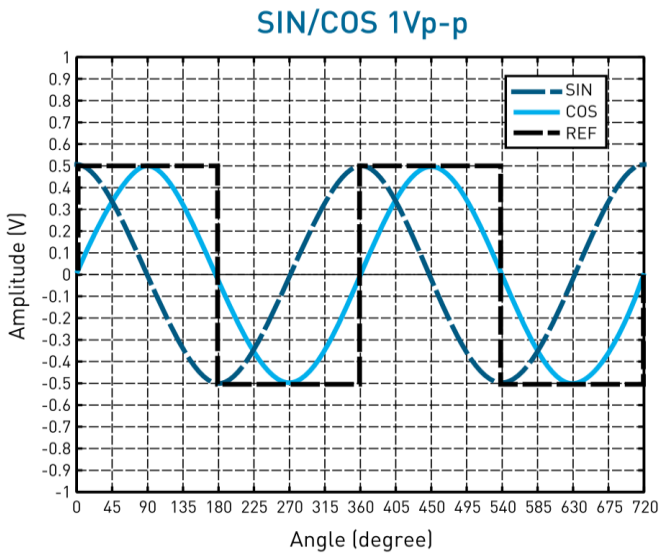

Figure 3.2.4.1

■ **Digital signal**

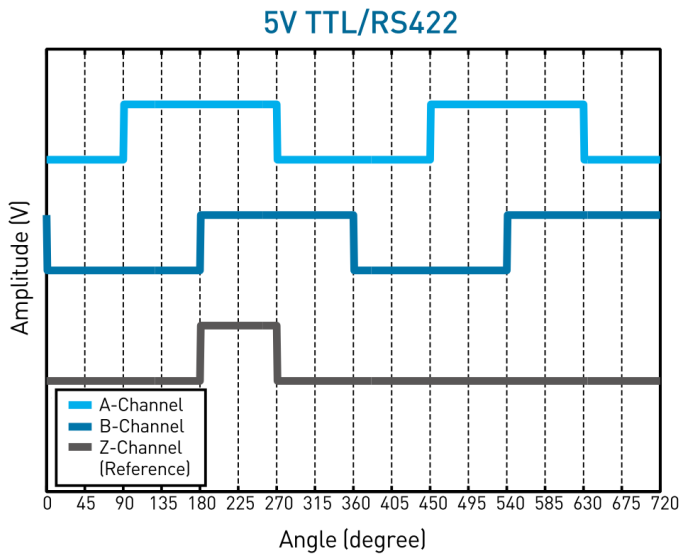

Figure 3.2.4.2

3.3 Order code

Select suitable incremental position measurement system based on requirement.

3.3.1 PM-A series

■ Incremental position scale

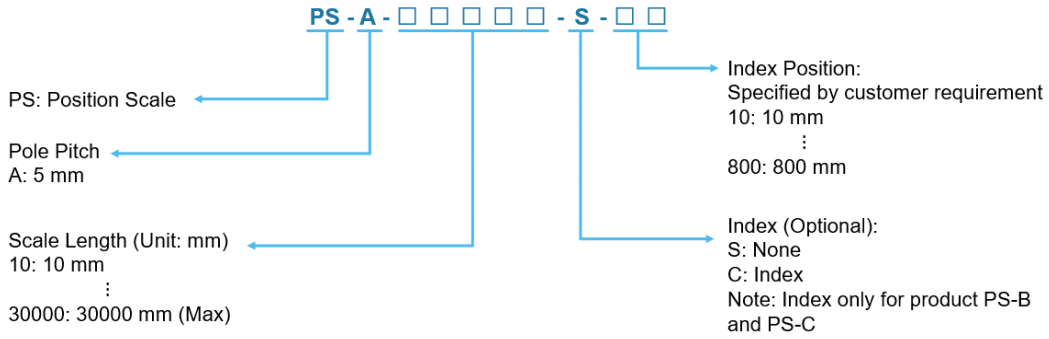

Figure 3.3.1.1

■ V type position measurement

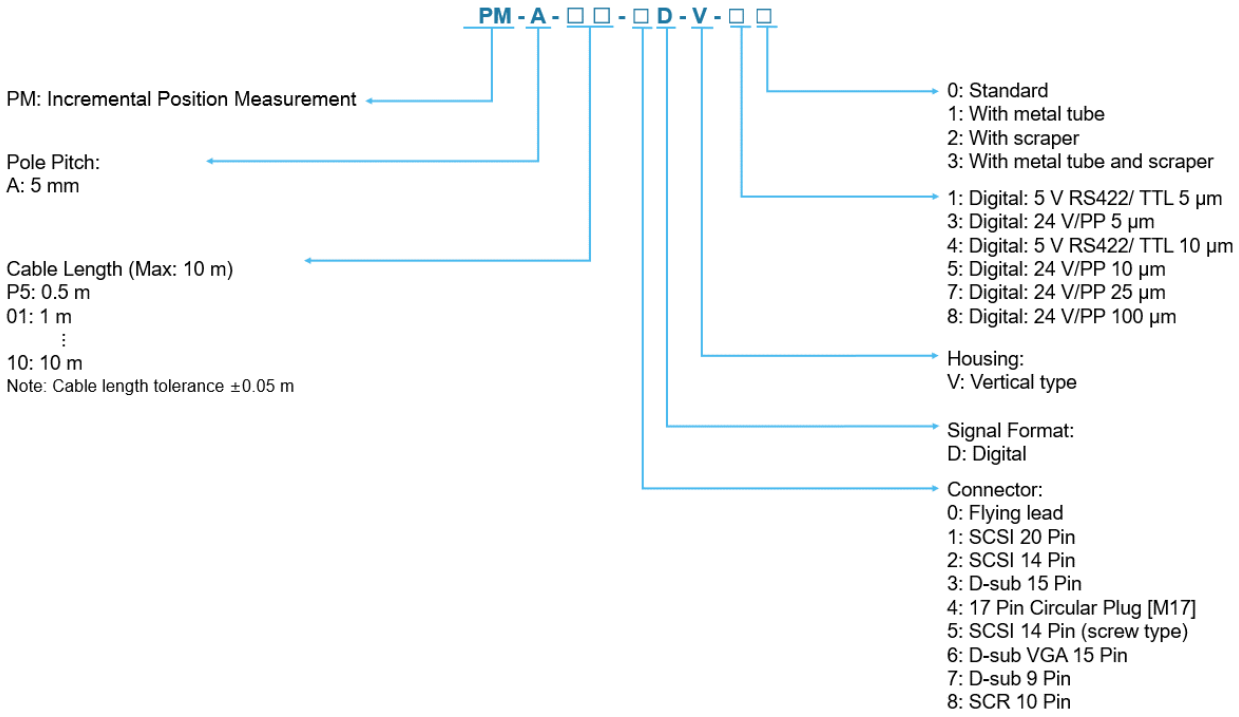

Figure 3.3.1.2

3.3.2 PM-B / PM-C series

■ Incremental position scale

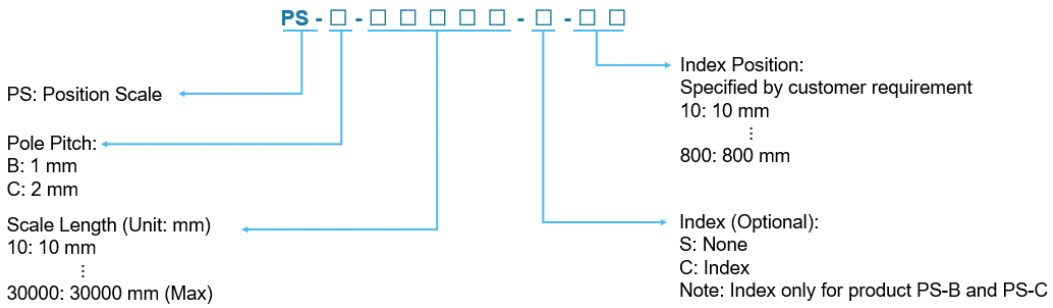

Figure 3.3.2.1

■ T type, C type position measurement

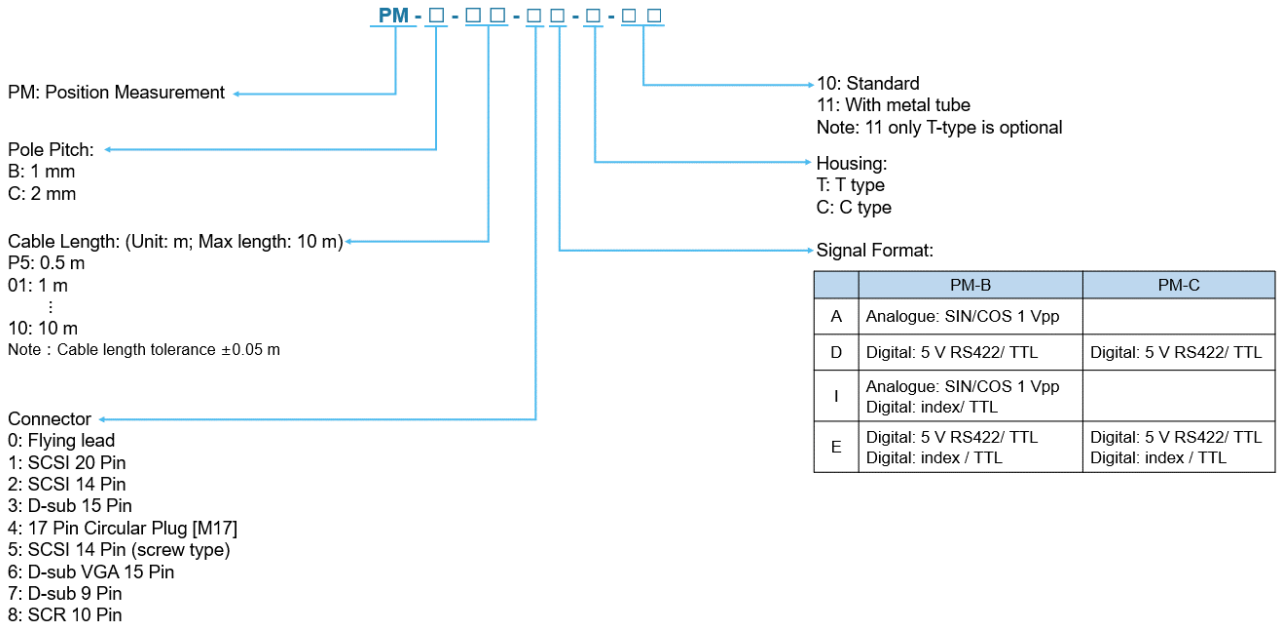

	PM-B	PM-C
A	Analogue: SIN/COS 1 Vpp	
D	Digital: 5 V RS422/ TTL	Digital: 5 V RS422/ TTL
I	Analogue: SIN/COS 1 Vpp Digital: index/ TTL	
E	Digital: 5 V RS422/ TTL Digital: index / TTL	Digital: 5 V RS422/ TTL Digital: index / TTL

Figure 3.3.2.2

■ PG type position measurement

PM - □ - □ □ - □ □ - G - □ □ - □ □

PM: Position Measurement

Pole Pitch:
B: 1 mm

Cable Length (Unit: mm, Max length: 10 m)
P5: 0.5 m
01: 1 m
⋮
10: 10 m
Note: Cable length tolerance ±0.05 m

Connector:
0: Flying lead
1: SCSI 20 Pin
2: SCSI 14 Pin
3: D-sub 15 Pin
4: 17 Pin Circular Plug [M17]
5: SCSI 14 Pin (screw type)
6: D-sub VGA 15 Pin
7: D-sub 9 Pin
8: SCR 10 Pin

10: Standard
11: With metal tube

20: H20 (for PGH20 guideway system)
25: H25 (for PGH25 guideway system)

Housing:
G: PG type

Signal Format:

	PM-B	PM-C
A	Analogue: SIN/COS 1 Vpp	
D	Digital: 5 V RS422/ TTL	Digital: 5 V RS422/ TTL
I	Analogue: SIN/COS 1 Vpp Digital: index/ TTL	
E	Digital: 5 V RS422/ TTL Digital: index / TTL	Digital: 5 V RS422/ TTL Digital: index / TTL

Figure 3.3.2.3

3.3.3 Counter series

■ Micro LCD counter system

UPLD - A - □ □ - □ - □ □

UPLD: Micro LCD Counter System

Pole Pitch:
A: 5 mm

Cable Length
(Unit: mm, Max length: 3 m)
01: 1 m
02: 2 m
03: 3 m
Note: Cable length tolerance ±0.05 m

00: Standard (E type readhead)
20: for H20 guideway system
25: for H25 guideway system
30: for H20 guideway system
35: for H20 guideway system
45: for H20 guideway system
55: for H20 guideway system

Housing:
E:E type
H:Htype

Figure 3.3.3.1

■ LCD counter system

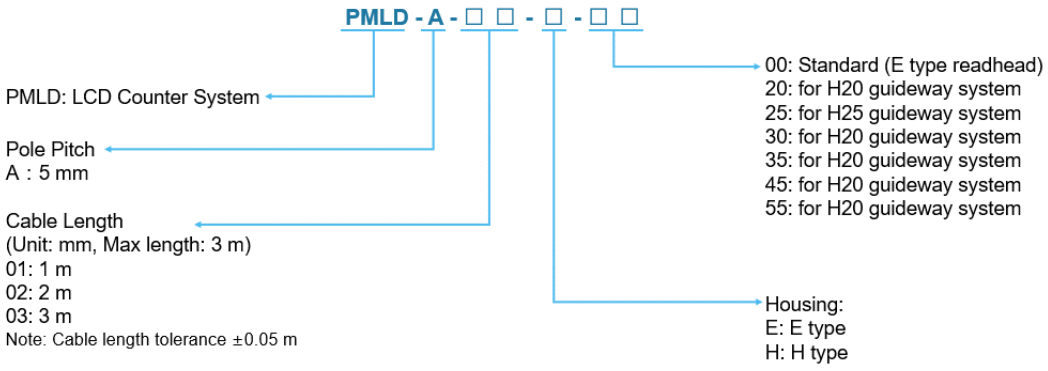

Figure 3.3.3.2

■ High performance single-axis counter

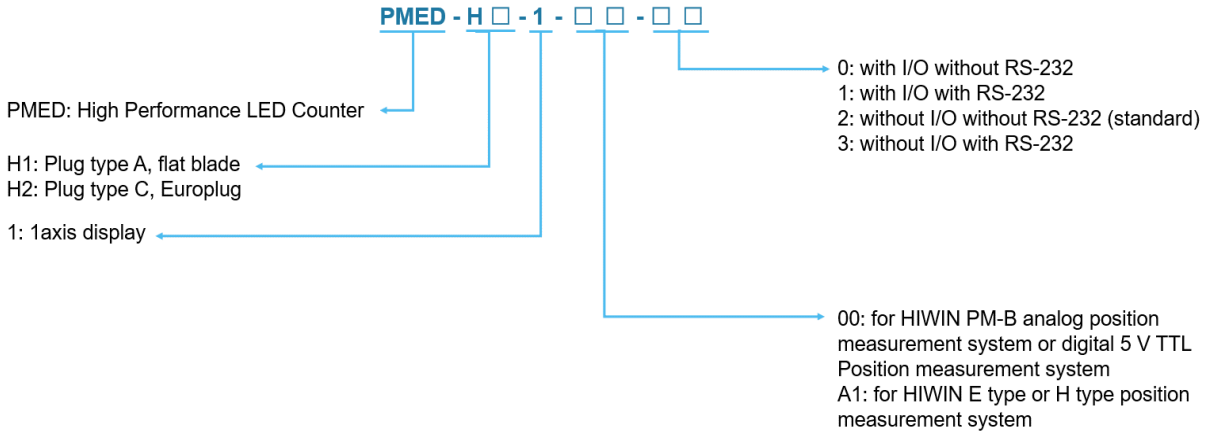

Figure 3.3.3.3

■ High performance multi-axis counter

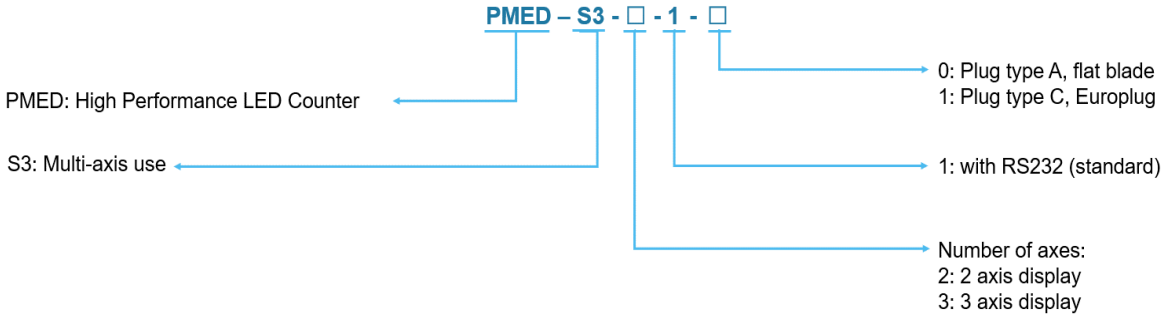

Figure 3.3.3.4

■ Multi-function and multi-axis counter for machine tools

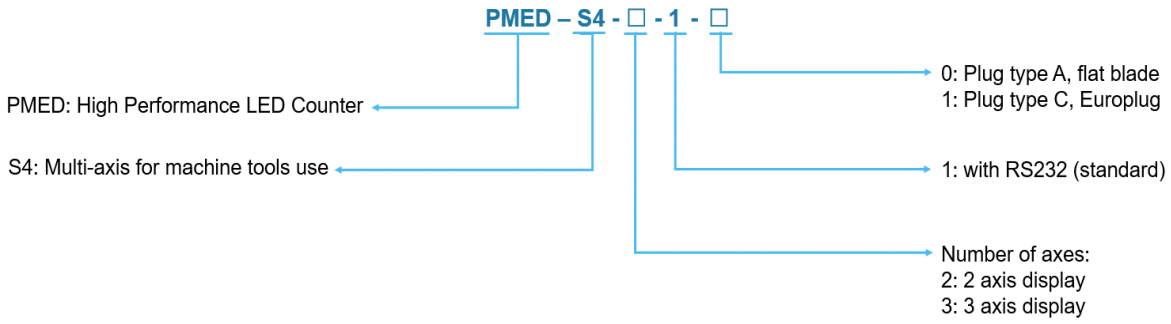

Figure 3.3.3.5

4. Transport and setup

4. Transport and setup 4-1
4.1 Delivery 4-2
4.2 Transport to the installation site 4-2
4.3 Requirements at the installation site 4-3
4.3.1 Recommended accuracy for installation surface 4-3
4.3.2 Dimensions of incremental position measurement system 4-4
4.3.2.1 PM-A series 4-4
4.3.2.2 PM-B / PM-C series 4-4
4.3.2.3 Counter series 4-7
4.4 Storage 4-10
4.5 Unpacking and setup 4-12

4.1 Delivery

Transport the product in the original unopened packaging.

4.2 Transport to the installation site

Keep the product away from strong magnetic materials and strong magnetic fields, or the scale and the accuracy will be affected.

⚠CAUTION
◆ Do not apply excessive force to the product. ◆ Do not drop the product. ◆ Magnetic objects (e.g., screwdriver) cannot be in contact with the scale.

4.3 Requirements at the installation site

This section explains the installation interface and dimension definitions of incremental position measurement system.

⚠CAUTION
◆ Before installation, check if the position measurement has transport damages. Do not install damaged position measurement.

4.3.1 Recommended accuracy for installation surface

The sectional view of the base of the installation platform and the recommended tolerances are shown as follows.

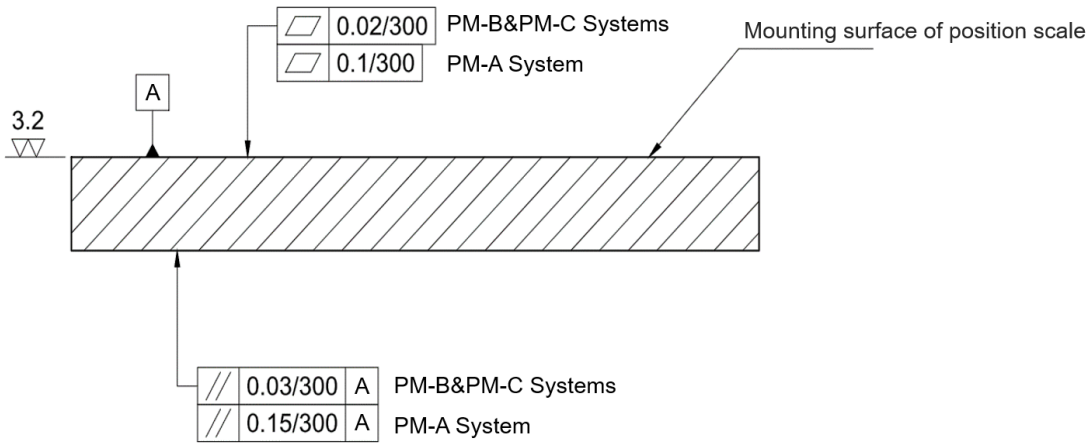

Figure 4.3.1.1

4.3.2 Dimensions of incremental position measurement system

4.3.2.1 PM-A series

■ **V type position measurement**

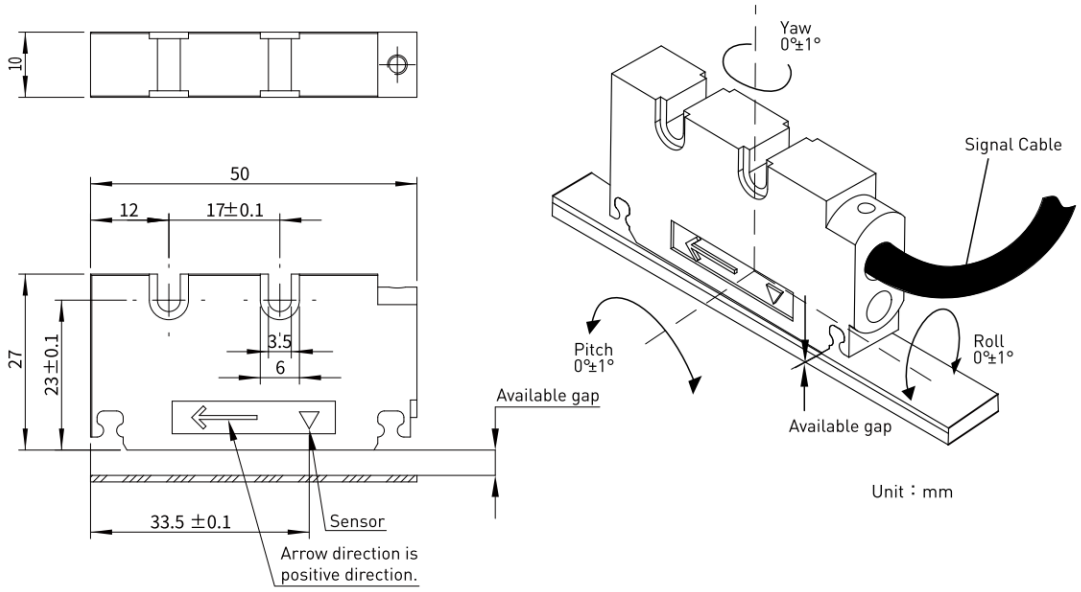

Figure 4.3.2.1.1

4.3.2.2 PM-B / PM-C series

■ **T type position measurement**

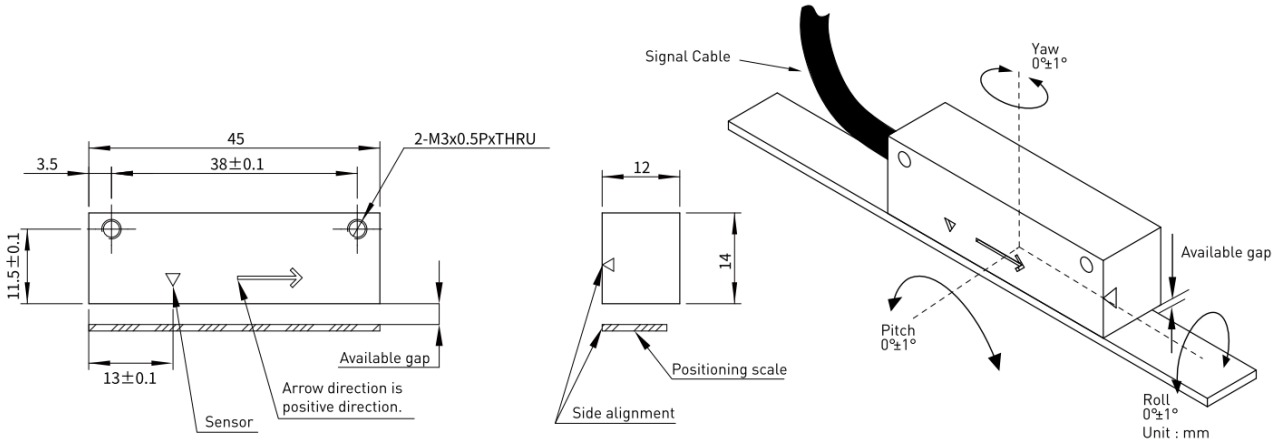

Figure 4.3.2.2.1

■ PG type position measurement

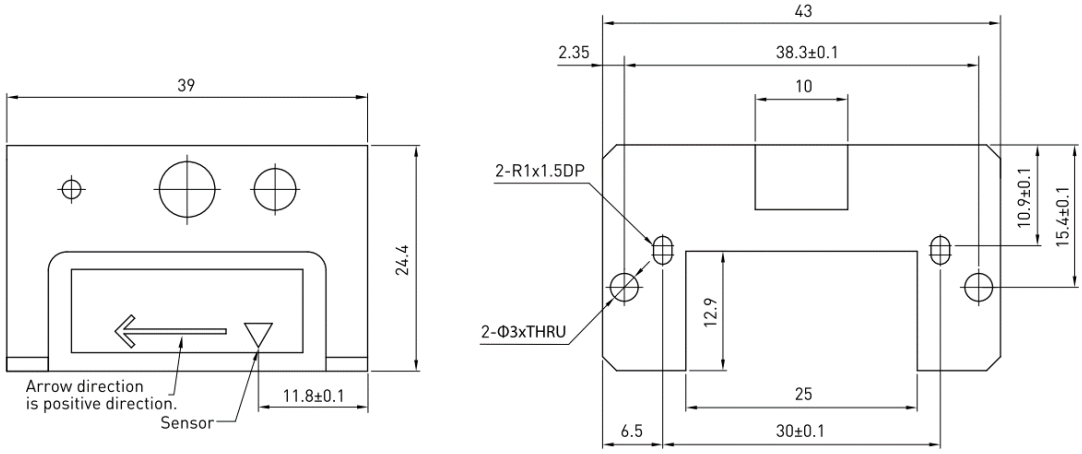

※Note:These dimensions are suitable for HIWIN PGH20 linear guideway.

Figure 4.3.2.2.2

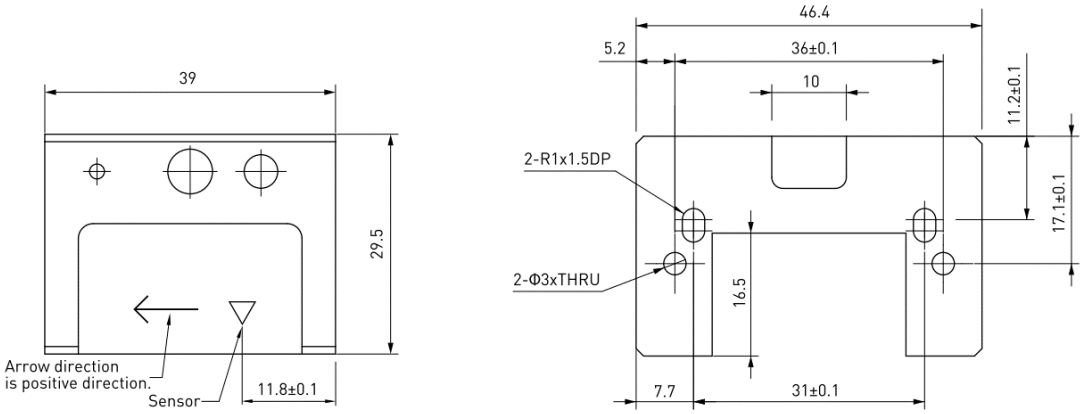

※Note:These dimensions are suitable for HIWIN PGH25 linear guideway.

Figure 4.3.2.2.3

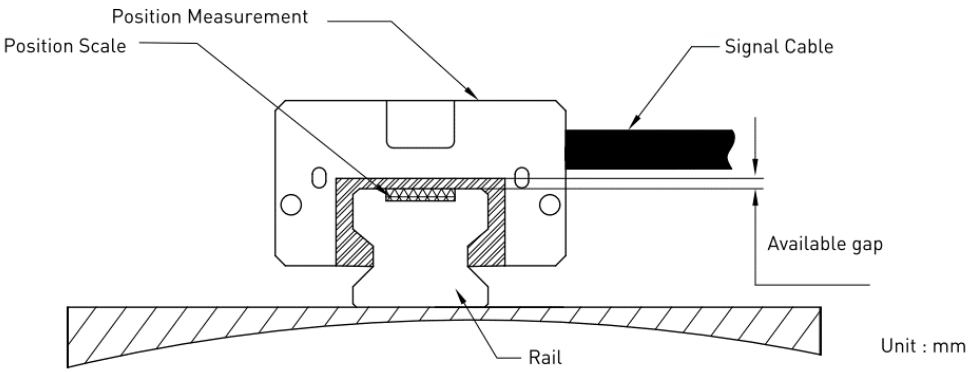

Figure 4.3.2.2.4

■ C type position measurement

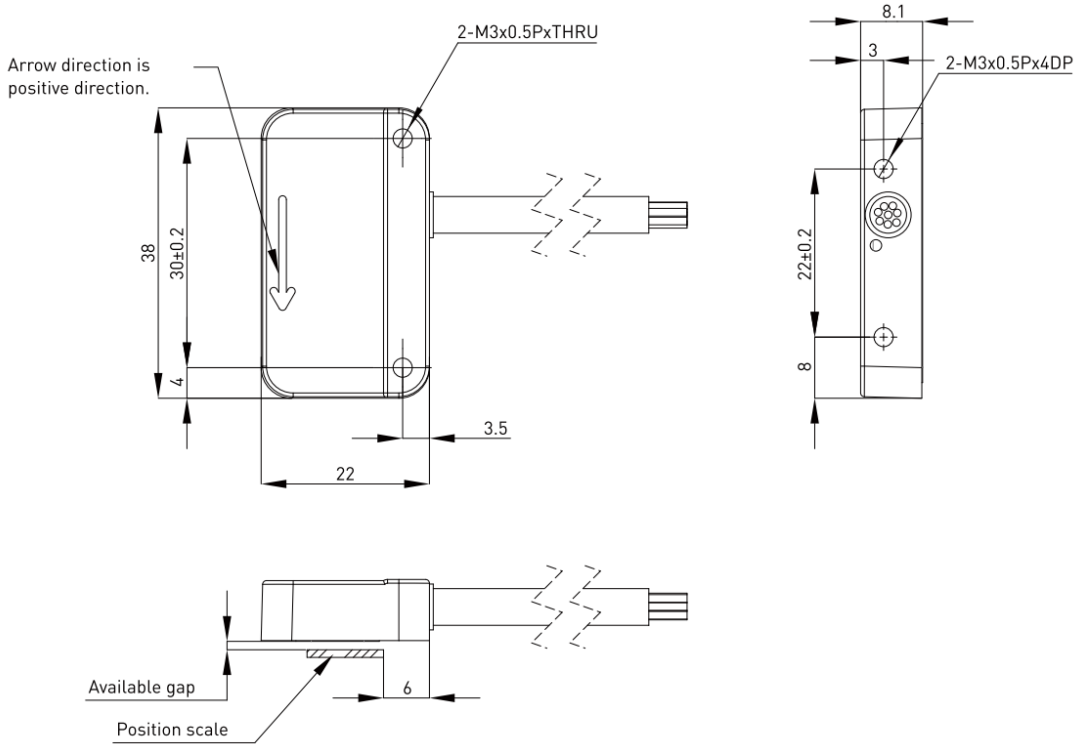

Figure 4.3.2.2.5

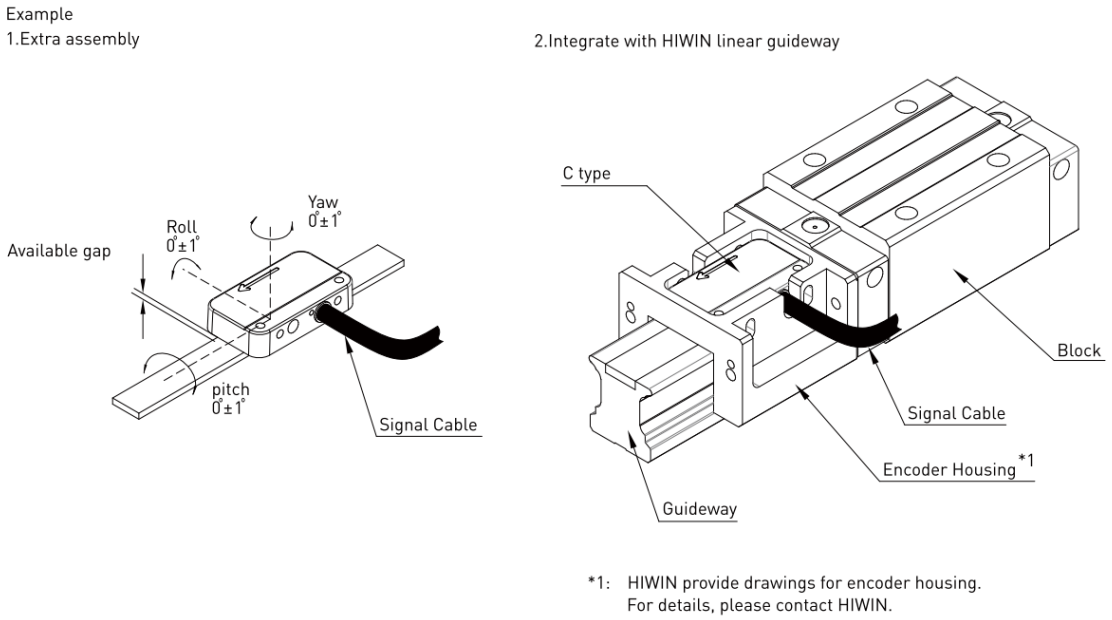

Figure 4.3.2.2.6

4.3.2.3 Counter series

■ **Micro LCD counter system**

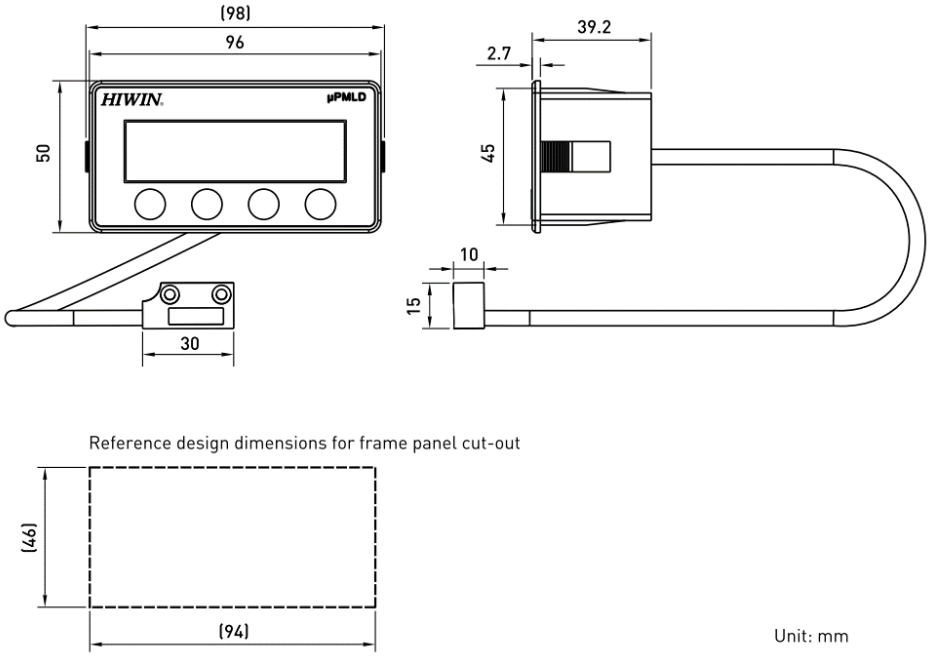

Figure 4.3.2.3.1

■ **LCD counter system**

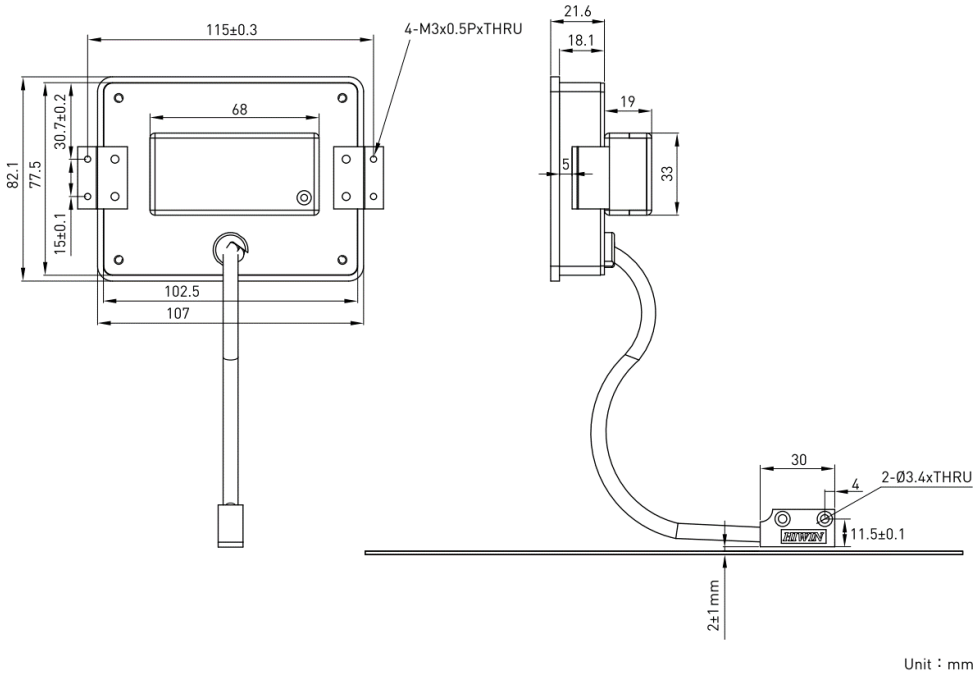

Figure 4.3.2.3.2

■ High performance single-axis counter

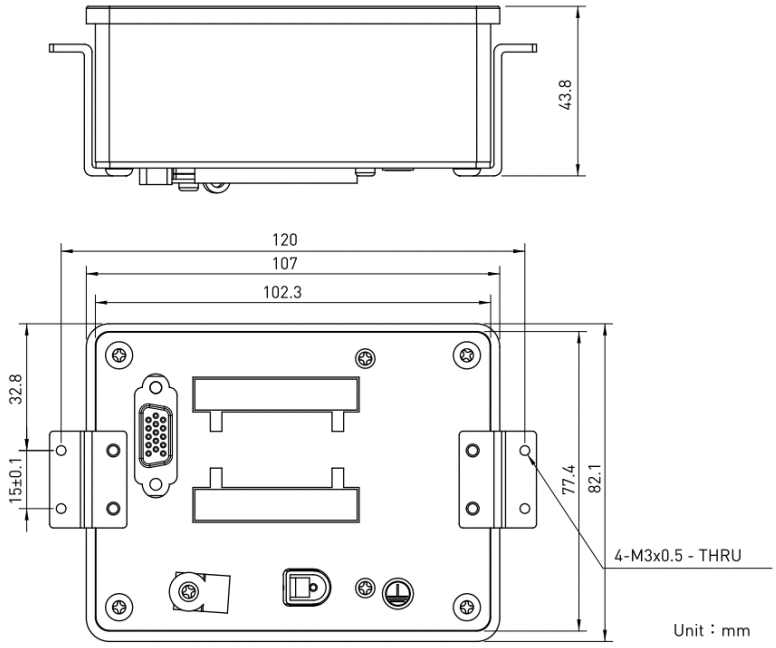

Figure 4.3.2.3.3

■ High performance multi-axis counter

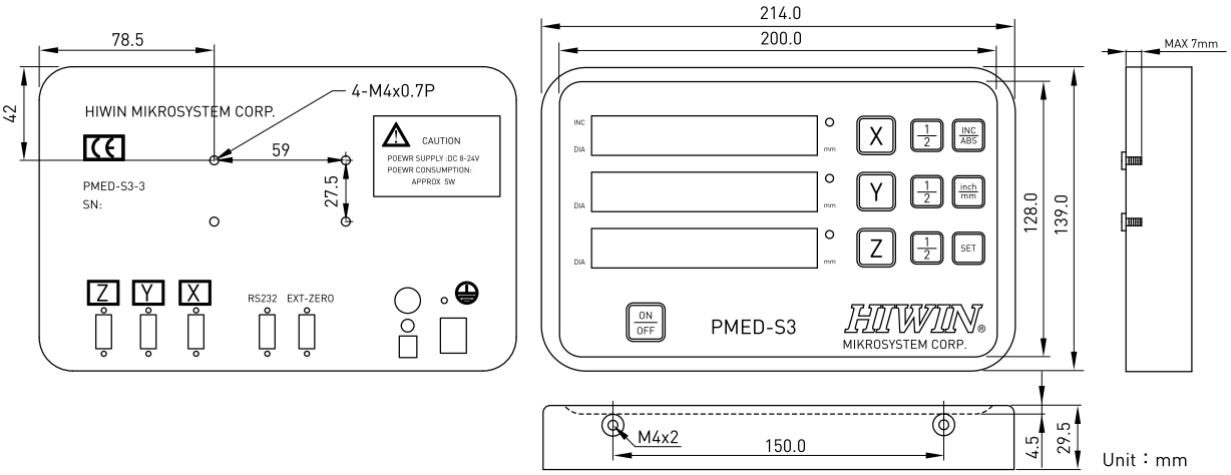

Figure 4.3.2.3.4

■ Multi-function and multi-axis counter for machine tools

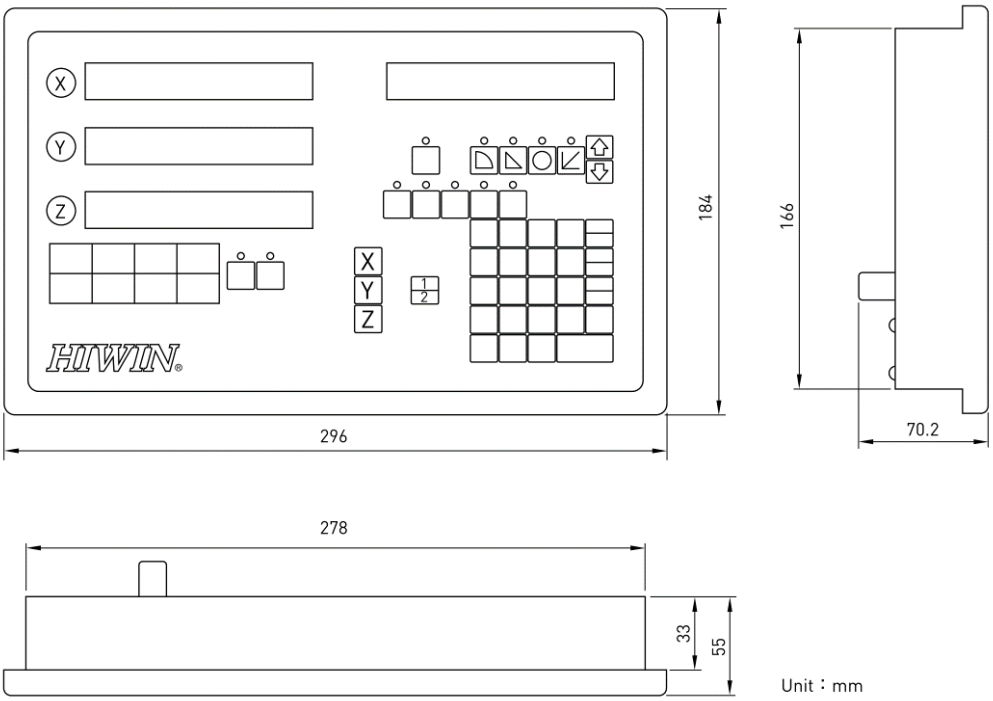

Figure 4.3.2.3.5

4.4 Storage

Store and keep the position measurement with caution. Please note the following:

- Store the position measurement in the original unopened packaging.
- Prevent the position measurement from physically harmful influences, including dust, heat, and humidity.
- Do not damage the connection via mechanical or thermal shock.

Table 4.4.1

		Position Measurement	Counter
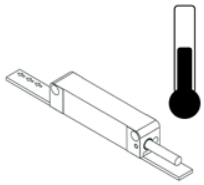	Operating temperature	0°C~50°C	0°C~50°C
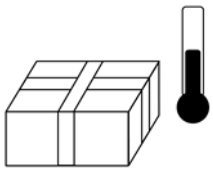	Storage temperature	-5°C~70°C	Micro LCD counter system: -5°C~55°C Others: -5°C~70°C
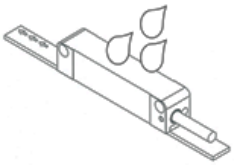	Waterproof?	Yes	No

⚠CAUTION		
	◆ Do not scratch the position scale with sharp objects.	
	◆ Keep magnetic objects away from the position scale.	
	◆ Do not band the position scale.	
	◆ When storing the position scale, the radius should not be smaller than 50 mm.	
	✓	Hydrochloric acid, Alcohol, Seawater, Antifreeze, Brake oil, Engine oil
	✗	Carbon tetrachloride, Heptane, Vapor, Turpentine, Trichloroethylene, Kerosene, Toluene

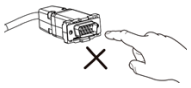	◆ Do not directly touch the connector, or the generated static electricity may affect the function.
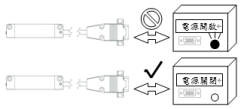	◆ Do not plug or unplug the connector when the power is on.

4.5 Unpacking and setup

Keep away from magnetic objects when unpacking the product. The unpack procedure of the product is as follows:

Step1. Ensure the quantity and the specification on the label are correct.

Step2. Carefully unpack the carton and keep the product away from magnetic objects.

Step3. Preserve the carton after unpacking, send it back if there are any problems. If there are no questions, deal with the packaging environmentally friendly.

Step4. Wear an electrostatic wristband first. Carefully take out the product and inspect if the product inside is correct without any damage on the surface. Users can take a photo to record. During the process, avoid the direct contact with the adapters or bare wires.

Step5. Carefully transport the product and avoid heavy drops and dents.

5. Assembly and connection

5. Assembly and connection 5-1

5.1 Mechanical installation 5-2

5.1.1 Incremental position scale installation 5-3

5.1.2 Incremental position measurement installation 5-5

5.1.3 Counter installation 5-6

5.2 Electrical installation 5-7

5.2.1 Port types of incremental position measurement 5-8

5.2.2 Pin assignment of signals for counter 5-13

5.2.3 Configuration of signal receiver 5-15

5.1 Mechanical installation

This section explains the installation of incremental position measurement system. Refer to chapter 4 for the installation dimensions and specifications.

⚠WARNING

Danger due to electrical voltage!

Dangerous currents may flow before and during assembly, disassembly and repair work.

- Before and during all assembly, disassembly or repair work, the position measurement system or the higher-level system must be de-energized and it must be ensured that the mains connection cannot be re-established by other persons!
- Observe the assembly instructions of the other system components (e.g., linear motor, servo drive)!

⚠CAUTION

Possible damage to position measurement system!

Position scale must not be exposed to strong magnetic fields. Magnetic dust can falsify the measuring signal or damage the position measurement system.

- Keep the distance between the position measurement systems and the permanent magnets of linear motor axes!
- Be cautious when using dial gauge holders (e.g., to align the profile rails)!
- Avoid strong shocks (e.g., use of a hammer)!
- Do not use the system in environments with magnetic dust (e.g., graphite dust)!

⚠CAUTION

Possible damage to position measurement system!

Magnetic chips or other foreign objects may stick to the position scale. This can destroy the mechanics of the encoder.

- Check the air gap between the scanning unit and the position scale regularly and keep it free!

5.1.1 Incremental position scale installation

⚠CAUTION

- When installing the position scale, ensure there is no strong magnetic field or magnetic objects around it to prevent degaussing.
- Stay at least 5 cm away from the magnetic field strength of 5000 gauss to prevent the position measurement system from disruption.

To prevent the scale from skew, use the installation fixture and follow the steps below for installation.

Step 1: Clean the installation surface.

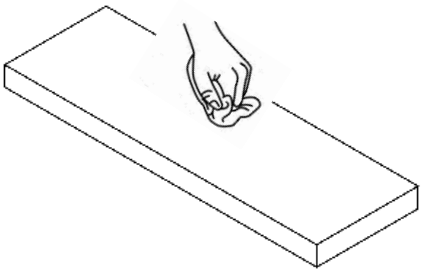

Figure 5.1.1.1

Step 2: Tear off the double-sided tape of the position scale.

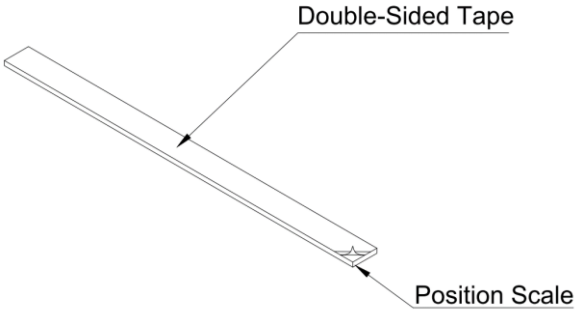

Figure 5.1.1.2

Step 3: Use the installation fixture to paste the position scale on the installation surface.

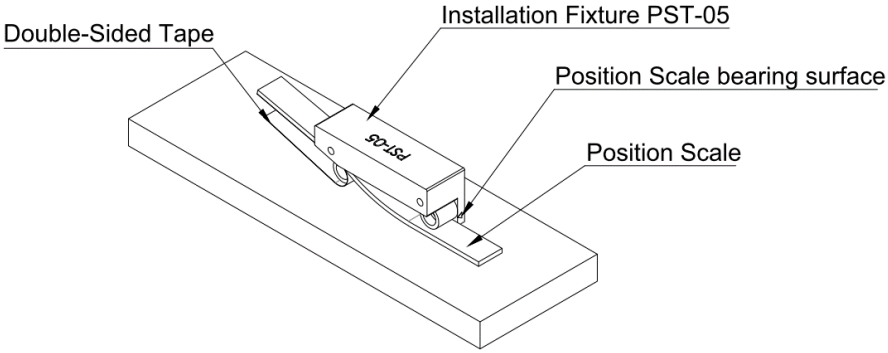

Figure 5.1.1.3

Note:

The installation fixture here is for demonstration only. Different read head has its corresponding installation fixture. Refer to section 11.4 for details.

Step 4: Clean the surface of the position scale.

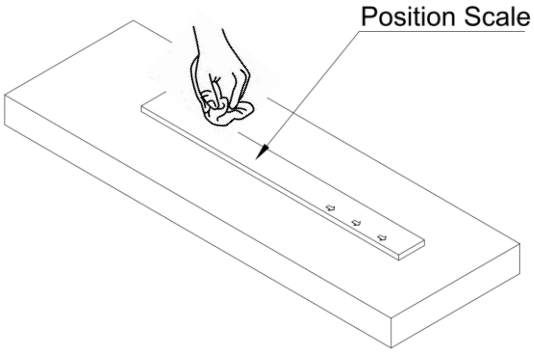

Figure 5.1.1.4

Step 5: Tear off the double-sided tape of the cover strip.

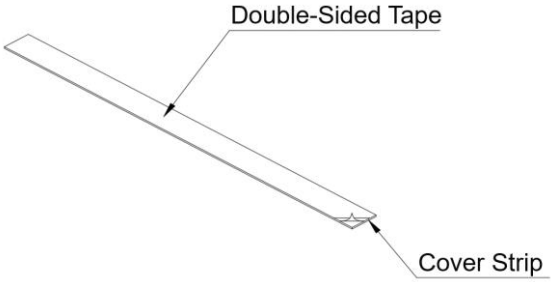

Figure 5.1.1.5

Step 6: Paste the cover strip on the position scale.

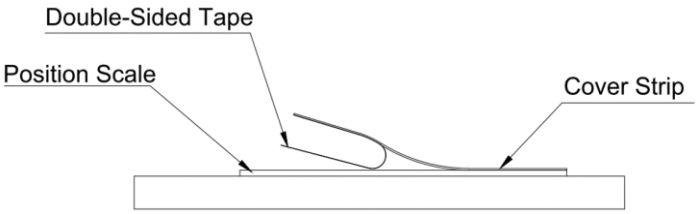

Figure 5.1.1.6

5.1.2 Incremental position measurement installation

The standard installation gap and the specifications of offset angle are as follows:

Table 5.1.2.1

	PM-A series	PM-B series	PM-C series
Standard installation gap	2±1 mm	0.2±0.1 mm	0.5±0.3 mm
Specifications of offset angle	Refer to chapter 4	Same as PM-C series, refer to chapter 4.	Same as PM-B series, refer to chapter 4.

All incremental position measurements must follow the signal outlet specifications:
Do not bend the signal cable when the outlet is smaller than 30 mm, and the minimum bending radius is 40 mm.

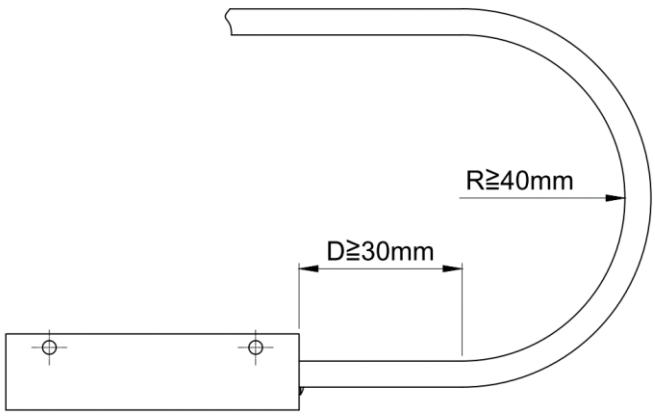

Figure 5.1.2.1 Specifications of outlet and bending radius for incremental position measurement

Note:
Here takes T type position measurement as the demonstration. The signal outlet specifications of all read heads are the same.

5.1.3 Counter installation

■ **Micro LCD counter system (UPLD), LCD counter system (PMLD)**

UPLD and PMLD can be used with E type and H type read head.
The installation specifications for E type read head are shown in the following figure. H type read head is used with HIWIN guideway, so there are no installation specifications.

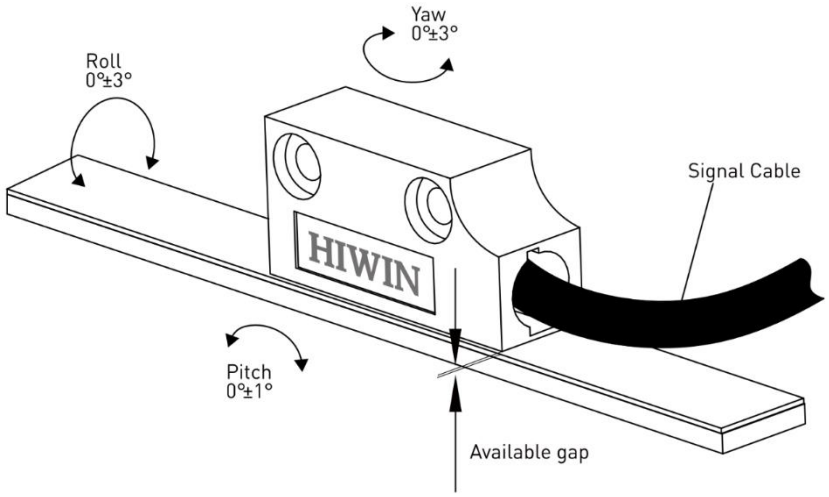

Figure 5.1.3.1 Installation specifications for E type read head

The operations manual of UPLD and PMLD:
https://www.hiwinmikro.tw/en/product/positioning-measurement-system/positioning-measurement-system-5mm

■ **High performance LED counter**

There are three kinds of high performance LED counters: high performance single-axis counter, high performance multi-axis counter and multi-function and multi-axis counter for machine tools.
High performance LED counter can be used with different position measurement (read head / encoder). Refer to section 5.2.2 for the pin assignment of signals. Follow the installation specifications of the used position measurement.

The operations manual of high performance single-axis counter:
https://www.hiwinmikro.tw/en/product/positioning-measurement-system/positioning-measurement-system-5mm

5.2 Electrical installation

This section explains the wiring method and the pin definition of connectors.

⚠WARNING

- Since the position measurement is sensitive to static electricity, please be careful. Without proper ESD protection, do not touch the cables or the pins of connectors.
- Do not perform wiring work or disconnect electrical connections when power on.
- Perform wiring work in power off state only.
- Check all the cables and plug connections before switching on the device.

⚠WARNING

Danger due to electrical voltage!

Dangerous currents may flow before and during assembly, disassembly and repair work.

- Ensure the system (e.g., linear motor axis) is properly earthed via the PE rail in the switch cabinet before connecting the electrical power supply!
- Electrical currents can also flow when the motor is not moving. Never disconnect electrical connections while they are live. In unfavorable cases, electric arcs can occur and injure persons and damage contacts!
- Observe the assembly instructions of the other system components (e.g., linear motor, servo drive)!

5.2.1 Port types of incremental position measurement

All the port types provided below can be used with PM-A, PM-B and PM-C series. Refer to the model description in section 3.3.

All the products can use flying lead. The diagram and the pin definition are as follows.

Figure 5.2.1.1 Flying lead

Table 5.2.1.1

Function	Signal		Wire Color	Flying Lead
	Analog	Digital		
Power supply	5 V DC		Brown	Brown
	GND		White	White
Output signal	SIN+	A+	Green	Green
	SIN-	A-	Yellow	Yellow
	COS+	B+	Blue	Blue
	COS-	B-	Red	Red
Reference point signal	REF+	Z+	Violet	Violet
	REF-	Z-	Gray	Gray
Shield			Shield	Shield

■ **SCSI 14 Pin / SCSI 14 Pin with screw**

Figure 5.2.1.2 SCSI 14 Pin

Figure 5.2.1.3 SCSI 14 Pin with screw

Table 5.2.1.2

Function	Signal		Wire Color	Connector [Male] (SCSI 14 Pin)	Connector [Male] (SCSI 14 Pin with screw)
	Analog	Digital		Analog	
Power supply	5 V DC		Brown	1	
	GND		White	8	
Output signal	SIN+	A+	Green	10	
	SIN-	A-	Yellow	11	
	COS+	B+	Blue	3	
	COS-	B-	Red	4	
Reference point signal	REF+	Z+	Violet	5	
	REF-	Z-	Gray	6	
Shield				Case	

Note:

Only for analog signal.

■ SCSI 20 Pin

Figure 5.2.1.4 SCSI 20 Pin

Table 5.2.1.3

Function	Signal		Wire Color	Connector [Male] (SCSI 20 Pin)	
	Analog	Digital		Analog	Digital
Power supply	5 V DC		Brown	3	3
	GND		White	2	2
Output signal	SIN+	A+	Green	16	4
	SIN-	A-	Yellow	17	5
	COS+	B+	Blue	18	6
	COS-	B-	Red	19	7
Reference point signal	REF+	Z+	Violet	8	8
	REF-	Z-	Gray	9	9
Shield				Case	

■ D-sub 15 Pin

Figure 5.2.1.5 D-sub 15 Pin

Table 5.2.1.4

Function	Signal		Wire Color	Connector [Male] (D-sub 15 Pin)	
	Analog	Digital		Analog	Digital
Power supply	5 V DC		Brown	4	7
	GND		White	12	2
Output signal	SIN+	A+	Green	9	14
	SIN-	A-	Yellow	1	6
	COS+	B+	Blue	10	13
	COS-	B-	Red	2	5
Reference point signal	REF+	Z+	Violet	3	12
	REF-	Z-	Gray	11	4
Shield				Case	

■ D-sub VGA 15 Pin

Figure 5.2.1.6 D-sub VGA 15 Pin

Table 5.2.1.5

Function	Signal		Wire Color	Connector [Male] (D-sub VGA 15 Pin)	
	Analog	Digital		Analog	Digital
Power supply	5 V DC		Brown	1	1
	GND		White	2	2
Output signal	SIN+	A+	Green	11	3
	SIN-	A-	Yellow	12	9
	COS+	B+	Blue	13	4
	COS-	B-	Red	14	10
Reference point signal	REF+	Z+	Violet	7	7
	REF-	Z-	Gray	8	8

Function	Signal		Wire Color	Connector [Male] (D-sub VGA 15 Pin)	
	Analog	Digital		Analog	Digital
Shield				Case	

■ D-sub 9 Pin

Figure 5.2.1.7 D-sub 9 Pin [Female]

Table 5.2.1.6

Function	Signal		Signal	Connector [Male] (D-sub 9 Pin)
	Analog	Digital		Digital
Power supply	5 V DC		Brown	2
	GND		White	1
Output signal	SIN+	A+	Green	3
	SIN-	A-	Yellow	8
	COS+	B+	Blue	4
	COS-	B-	Red	7
Reference point signal	REF+	Z+	Violet	5
	REF-	Z-	Gray	9
Shield				Case

■ SCR 10 Pin

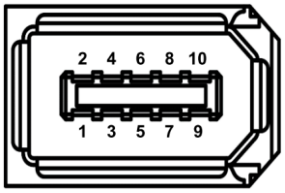

Figure 5.2.1.8 SCR 10 Pin

Table 5.2.1.7

Function	Signal		Signal	Connector [Male] (SCR 10 Pin)
	Analog	Digital		Digital
Power supply	5 V DC		Brown	1
	GND		White	2

Function	Signal		Signal	Connector [Male] (SCR 10 Pin)
	Analog	Digital		Digital
Output signal	SIN+	A+	Green	5
	SIN-	A-	Yellow	6
	COS+	B+	Blue	7
	COS-	B-	Red	8
Reference point signal	REF+	Z+	Violet	9
	REF-	Z-	Gray	10
Shield				Case

■ 17-Pin Circular Plug

Figure 5.2.1.9 17-Pin Circular Plug

Table 5.2.1.8

Function	Signal		Signal	Connector [Male] (17-Pin Circular Plug)
	Analog	Digital		Digital
Power supply	5 V DC		Brown	1
	GND		White	2
Output signal	SIN+	A+	Green	5
	SIN-	A-	Yellow	6
	COS+	B+	Blue	7
	COS-	B-	Red	8
Reference point signal	REF+	Z+	Violet	9
	REF-	Z-	Gray	10
Shield				Case

Note:

Brand: INTERCONTEC; specification: AKUA874MR1087004A000.

5.2.2 Pin assignment of signals for counter

This section explains the pin assignment of signals for high performance LED counter. Since Micro LCD counter system and LCD counter system directly connect to the read head, there is no related description.

■ High performance single-axis counter

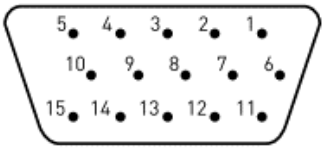

Figure 5.2.2.1

Table 5.2.2.1 Pin assignment of input signals

Pin	Signal	Pin	Signal	Pin	Signal
1	+5 V	6	NC	11	SIN+ (Analog)
2	GND	7	Z+	12	SIN- (Analog)
3	A+ (Digital)	8	Z-	13	COS+ (Analog)
4	B+ (Digital)	9	A- (Digital)	14	COS- (Analog)
5	NC	10	B- (Digital)	15	NC

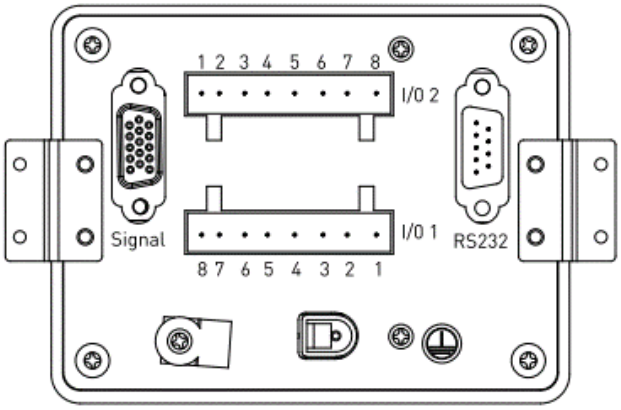

Figure 5.2.2.2

Table 5.2.2.2 Pin assignment of output signals

Pin	I/O 1	I/O 2
1	Reserved	Reserved
2		
3	Reserved	Reserved
4		
5	Relay 0 (CH-0)	Relay 2 (CH-2)
6		

Pin	I/O 1	I/O 2
7	Relay 1 (CH-1)	Relay 3 (CH-3)
8		

■ High performance multi-axis counter

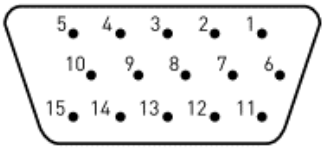

Figure 5.2.2.3

Table 5.2.2.3 Pin assignment of input signals

Pin	Signal	Pin	Signal	Pin	Signal
1	+5 V	6	FG	11	NC
2	GND	7	NC	12	NC
3	A+	8	NC	13	NC
4	B+	9	NC	14	NC
5	ABS-	10	NC	15	NC

■ Multi-function and multi-axis counter for machine tools

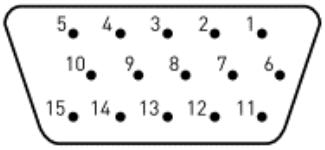

Figure 5.2.2.4

Table 5.2.2.4 Pin assignment of input signals

Pin	Signal	Pin	Signal	Pin	Signal
1	+5 V	6	FG	11	NC
2	GND	7	NC	12	NC
3	A+	8	NC	13	NC
4	B+	9	NC	14	NC
5	ABS-	10	NC	15	NC

5.2.3 Configuration of signal receiver

For incremental position measurement, there are two kinds of signal outputs, analog signal and digital signal. The configurations of signal receiver are shown in the following figure.

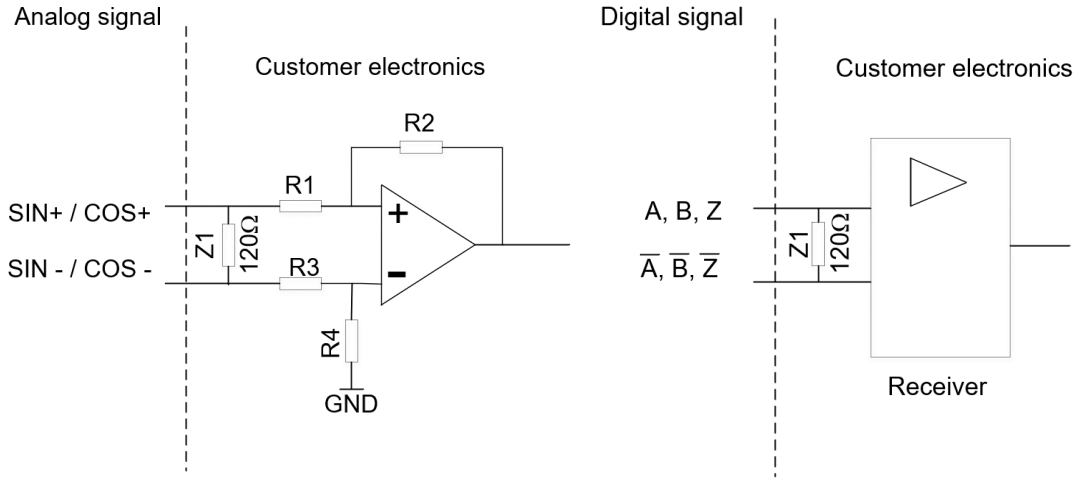

Figure 5.2.3.1

Table 5.2.3.1

Signal	Description
SIN+ / COS+	Analog signal, sender, + output
SIN- / COS-	Analog signal, sender, - output
A, B, Z	Digital signal, sender, + output
$\overline{A}$, $\overline{B}$, $\overline{Z}$	Digital signal, sender, - output

(This page is intentionally left blank.)

6. Commissioning

6. Commissioning 6-1
6.1 Commissioning 6-2
6.1.1 Counter UPLD and PMLD 6-2

6.1 Commissioning

After proper installation and wiring, users can make the incremental position measurement system operate normally by switching on the operating voltage. Besides, observe the assembly instructions of the other system components (e.g., linear motor, servo drive)!

The following sequence must be observed when commissioning position measurement system:

- Connect encoder.
- Apply supply voltage.
- Do not exceed the operating voltage, otherwise the encoder may be destroyed!
- Check output signal (e.g., with an oscilloscope).

6.1.1 Counter UPLD and PMLD

Commissioning timing: first installation or after re-disassembling the read head
This function helps users check if the installation of read head and position scale is proper, and it also corrects the sensing signal to improve the accuracy of the system. Refer to the operations manual of UPLD and PMLD for detailed operation: https://www.hiwinmikro.tw/en/product/positioning-measurement-system/positioning-measurement-system-5mm

7. Maintenance and cleaning

7. Maintenance and cleaning 7-1
7.1 Maintenance 7-2
7.1.1 Counter 7-2
7.2 Cleaning 7-3

7.1 Maintenance

Position measurement system works without making contact and thus in principle maintenance-free. However, it must be regularly checked for dirt and, if necessary, cleaned with a suitable cleaning agent (e.g., alcohol). Dirt particles between the encoder and the position scale can destroy position measurement system.

⚠WARNING

Danger due to electrical voltage!

Dangerous currents may flow before and during assembly, disassembly and repair work.

- Ensure the system (e.g., linear motor axis) is properly earthed via the PE rail in the switch cabinet before connecting the electrical power supply!
- Electrical currents can also flow when the motor is not moving. Never disconnect electrical connections while they are live. In unfavorable cases, electric arcs can occur and injure persons and damage contacts!
- Observe the assembly instructions of the other system components (e.g., linear motor, servo drive)!

7.1.1 Counter

The counter does not need to be inspected daily, but the screen, battery box and appearance must be inspected at least every six months to one year.
The counter is not waterproof. Keep it away from water. Do not wash it with water.

7.2 Cleaning

If the surface of the position scale is dirty, gently wipe it with a soft cloth to avoid excessive cleaning of the position scale. Besides, regularly check the air gap.

⚠CAUTION
◆ Obstacle removal and maintenance can only be performed by HIWIN MIKROSYSTEM technicians or authorized dealers, and with appropriate protective equipment. ◆ Do not perform any maintenance actions while the motor is running. The controller must stop the motor first. ◆ Turn off the power and the main switch of the machine (refer to the machine manufacturer's instructions for operation).

(This page is intentionally left blank.)

8. Disposal

8. Disposal 8-1
8.1 Waste disposal 8-2
8.1.1 Incremental position measurement 8-2
8.1.2 Counter 8-2

8.1 Waste disposal

8.1.1 Incremental position measurement

The electronic components of incremental position measurement contain materials which are environmentally harmful but also recyclable. Therefore, when the position measurement has reached end-of-life or is out of service, please recycle it according to the environmental protection guidelines of the country/region. Do not discard it at will.

8.1.2 Counter

The electronic components of counter contain materials which are environmentally harmful but also recyclable. Please follow the disposal method of incremental position measurement to recycle it. If the 1.5 V AA battery (AAA alkaline battery) used by UPLD and PMLD is dead or leaks, please recycle it according to the waste battery recycling guidelines of the country/region.

9. Troubleshooting

9. Troubleshooting 9-1
9.1 Troubleshooting 9-2
9.1.1 Incremental position measurement 9-2
9.1.2 Counter 9-2

9.1 Troubleshooting

9.1.1 Incremental position measurement

When the incremental position measurement cannot normally operate or is incorrectly installed, check the following items for troubleshooting based on the used position measurement.

■ **PM-A series (V type position measurement)**

Table 9.1.1.1

Light	Troubleshooting
Green light	Normal operation. There is no need to do troubleshooting.
Red light	Check if the installation gap between position measurement and position scale meets the specification.
No light	Check if the position measurement connects to the power supply.

■ **PM-B / PM-C series (T type, PG type, C type position measurement)**

1. Check if the position measurement connects to the power supply.
2. Check if the position measurement is correctly connected to the servo drive.
3. Check if the installation gap between position measurement and position scale meets the specification.
4. Ensure the offset angle of position measurement does not exceed the specification. Refer to section 5.1.2.
5. Use magnetic analysis card to check if the magnetic poles of position scale have been demagnetized, making the position measurement fail to sense the position.

If the problem is still not solved, please contact the customer service of HIWIN MIKROSYSTEM or send the position measurement back to the factory for repairs through the dealers.

9.1.2 Counter

If something abnormal happens, restart the counter. If it cannot be restarted, please contact the customer service of HIWIN MIKROSYSTEM or send the counter back to the factory for repairs through the dealers.

10. Declaration of incorporation

10. Declaration of incorporation 10-1
10.1 Declaration of incorporation 10-2

10.1 Declaration of incorporation

HIWIN MIKROSYSTEM

大銀微系統股份有限公司
台灣40852台中市精密機械園區
精科中路6號
Tel : +886-4-23550110
Fax : +886-4-23550123

HIWIN MIKROSYSTEM CORP.
No.6, Jingke Central Rd., Precision Machinery Park, Taichung 40852, Taiwan
www.hiwinmikro.tw
business@hiwinmikro.tw

ISO 9001 FM57748 ISO 14001 EMS61827 OHSAS 18001 OHS568853 TAIWAN EXCELLENCE

Declaration of Conformity

according to EMC directive 2014/30/EU

Name and address of the manufacturer:
HIWIN MIKROSYSTEM CORP., No.6, Jingke Central Rd., Taichung Precision Machinery Park, Taichung 408226, Taiwan

Description and identification of the product:

Product	Positioning Measurement Systems MAGIC
Identification	Series: PM-B

The object of the declaration described above is in conformity with the relevant Union harmonization legislation Directives.

2011/65/EU	RoHS directive

References to the relevant harmonized standards used or references to the other technical specifications in relation to which conformity is declared

EN 61000-6-2:2005 EN 61000-6-2:2005/AC:2005	Electromagnetic compatibility (EMC) - Part 6-2: Generic standards - Immunity for industrial environments
EN 61000-6-4:2007 EN 61000-6-4:2007/A1:2011	Electromagnetic compatibility (EMC) - Part 6-4: Generic standards - Emission standard for industrial environments

This declaration of conformity is issued under the sole responsibility of the manufacturer.

Taichung 408226, Taiwan 09.08.2022	**YU, KAI-SHENG, Executive Vice President**	
(Place, Date)	(Surname, first name, and function of signatory)	(Signature)

11. Appendix

11. Appendix 11-1

11.1 Glossary 11-2

11.2 Unit conversion 11-3

11.3 Tolerances and hypotheses 11-5

11.3.1 Dimensional tolerances 11-5

11.3.2 Geometric tolerances 11-5

11.4 Optional accessories 11-6

11.1 Glossary

- **Incremental**

  Incremental position measurement cannot report the absolute position when the power is on. It must read the reference home position first before calculating the position. Incremental position signal can count in both directions to increase or decrease relative position information.

- **Accuracy**

  It is the closeness of the actual value to the measured position.

- **Resolution**

  It is the minimum measurement of step output for incremental position measurement system. This is the shortest distance of which the position measurement moves for the output to change by one count.

- **Repeatability**

  It is the ability to report the same position each time when the position measurement reaches a specific point on the axis. Sometimes it is also called reproducibility, scatter, or precision.

- **Hysteresis**

  It is the time delay in response to a change via input.

- **International Protection Marking**

  Also known as Ingress Protection Rating or IP code, it is defined in the international standard IEC60529. This defines the tightness of the electrical enclosure.

  International Protection Marking has two numbers: the first number represents the dustproof level (0~6), and the second number represents the waterproof level (0~9). For example, IP68 means that the dustproof level is 6, and the waterproof level is 8.

- **Terminal resistor**

  The terminal resistor is a resistor connected in parallel to a pair of communication cables at both ends of the line network, which can absorb the reflected waves on the network and effectively increase the signal strength. It is used to shield signal reflections, stabilize and adjust signals. The terminal matching resistance value is related to the impedance characteristics of the cable, and it has nothing to do with the cable length. The terminal resistance is generally between 100~140 ohm, and the typical value is 120 ohm.

11.2 Unit conversion

To convert the unit in column B to the unit in column A, multiply by the corresponding figure in the table.

■ Mass

		B			
		g	kg	lb	oz
A	g	1	0.001	0.0022	0.03527
	kg	1000	1	2.205	35.273
	lb	453.59	0.45359	1	16
	oz	28.35	0.02835	0.0625	1

■ Linear velocity

		B				
		m/s	cm/s	mm/s	ft/s	in/s
A	m/s	1	100	1000	3.281	39.37
	cm/s	0.01	1	10	3.281×10^{-2}	0.3937
	mm/s	0.001	0.1	1	3.281×10^{-3}	3.937×10^{-2}
	ft/s	0.3048	30.48	304.8	1	12
	in/s	0.0254	2.54	25.4	8.333×10^{-2}	1

■ Force

		B		
		N	lb	oz
A	N	1	0.2248	3.5969
	lb	4.4482	1	16
	oz	0.2780	0.0625	1

■ Length

		B					
		m	cm	mm	μm	ft	in
A	m	1	100	1000	1000000	3.281	39.37
	cm	0.01	1	10	10000	3.281×10^{-2}	0.3937
	mm	0.001	0.1	1	1000	3.281×10^{-3}	3.937×10^{-2}
	μm	1×10^{-6}	1×10^{-4}	0.001	1	3.281×10^{-6}	3.937×10^{-5}
	ft	0.3048	30.48	304.8	304800	1	12
	in	0.0254	2.54	25.4	25400	8.333×10^{-2}	1

■ Temperature

		B	
		°C	°F
A	°C	1	(°F - 32) x 5 / 9
	°F	(°C x 9 / 5) + 32	1

■ Magnetic field

		B		
		T	mT	G
A	T	1	1000	10000
	mT	1×10^{-3}	1	10
	G	1×10^{-4}	0.1	1

■ Voltage

		B	
		V	mV
A	V	1	1000
	mV	0.001	1

■ Current

		B	
		A	mA
A	A	1	1000
	mA	0.001	1

11.3 Tolerances and hypotheses

11.3.1 Dimensional tolerances

The dimensional tolerances for the product drawing are shown in the following table.

Table 11.3.1.1 Dimensional tolerances table (Unit: mm)

<6	6~30	30~120	120~300	300~600	600~1200	1200~2400	>2400
±0.1	±0.2	±0.3	±0.4	±0.5	±0.8	±1.0	±1.5

11.3.2 Geometric tolerances

The geometric tolerances are excerpted from JIS B 0021 (1998), as the following table shows.

Table 11.3.2.1 Geometric tolerances table

Type of Tolerance		Symbol	Definition
Form tolerance	Straightness tolerance	—	It refers to the range value of the line body that deviates from the geometric line.
	Flatness tolerance	⏥	It refers to the range value of the plane body that deviates from the geometric plane.
Orientation tolerance	Parallelism tolerance	//	It refers to the range value of a geometric line or geometric plane that should remain perpendicular and deviate from a geometric line or geometric plane, which is perpendicular to the datum line or datum plane.
	Perpendicularity tolerance	⊥	It refers to the range value of a line or plane that should have a theoretically correct angle, a geometric line or geometric plane that deviates from a theoretically correct angle relative to a reference line or plane.

11.4 Optional accessories

This product can be equipped with the accessories based on requirement.

■ Signal transfer cable

Various signal transfer cables are provided, which can be used with other brands of counters.

Product model:

STC - □ □ - □ □ - □

STC: Signal Transfer Cable

0: Standard type
1: with metal tube

00: D-sub VGA 15 Pin (for HIWIN counter)
01: D-sub 15 Pin (for M label counter)
02: Flying lead

01: Cable length 1 m
02: Cable length 2 m
Note: Cable length tolerance ±0.05 m

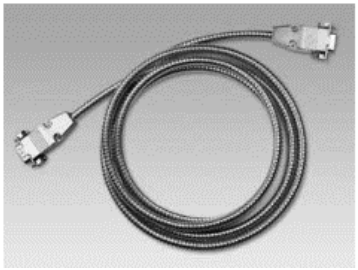

Figure 11.4.1 Signal transfer cable

■ Installation fixture

This facilitates the installation and ensures the parallelism of position scale's installation.

Product model:

PST - □ □

02-L: Apply to tiny type readhead.
(Cable routing on Left Hand Side of readhead)
02-R: Apply to tiny type readhead.
(Cable routing on Right Hand Side of readhead)
03: Apply to vertical type readhead.

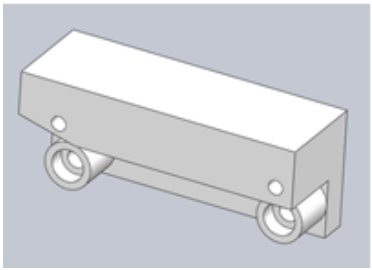

Figure 11.4.2 Installation fixture

- **End clamp**

  This ensures that the position scale can be used in harsh environments.

  Product model: PSF-01

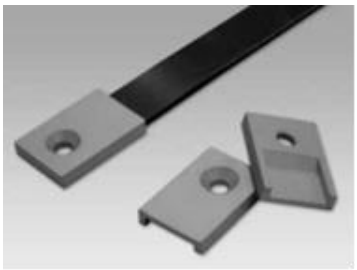

Figure 11.4.3 End clamp

- **Magnetic analysis card**

  With this, the incremental track and absolute track of position scale can be easily determined.

  Product model: MVF-03

Figure 11.4.4 Magnetic analysis card